Matt Waters

From: Yvettawill@cox.net
Sent: Thursday, February 08, 2018 7:24 PM
To: Matt Waters; Daniel Trautner; Brito Stephanie; Raymond Herb; CC; Parks; Emily Rodin; Joe Judy Cocke and
Subject: Re: Ladera Linda and discovery room. Please find another room for the discovery room.

PLEASE do not let the Ladera Linda residents get by with their suggestion for hallway displays and discovery carts as a discovery room. You have a wonderful nature room now that cannot be duplicated . It took years to get all the items together.. A great place to teach about what is at Palos Verdes. A lot of time and effort was spent putting that room together and many of the items cannot be replaced or duplicated. To some people nature is NOT important and to others it is ALL important. PLEASE fight for it and know you will NEVER get another room with everything together like that room. The butterfly collection is 80 years old and was collected as a child and with the help of a neighbor who was a science teacher they were ID's and got mounted. The butterfly garden is very special and Leslie is wonderful. Don't throw her away either.. Where would you find another bear skin? It was bought Many years ago and it is there because there were bears all over the area. Children and adults are really surprised at that. You read about bears going in swimming pools in Pasadena nearer the mountains. There were bears all over our area before they were all killed. There is a collection of all the abalone shell varieties that are in Calif and things in our tidal pools. They were left over from our store and are hard to find and some cannot be sold as they are on the endangered specie list. Tells about the peacocks, peahens and peachicks and eggs. Has a display on the native plants. Hands on rocks and minerals. Humming bird, raptors, endangered specie birds, ground squirrels, fox, raccoons, owls, skunks, possums, None of the schools or the parks have this information . You have something special Please do not let it get away.

The reptiles, insects, spiders of our area are on display, We need to teach which are safe and that ALL are our friends and how to act around them. To have wonderful pictures of birds taken by Steve Wolfe and to find the real next matching the bird is special. Steve has moved out of the area. The indio artifacts and fossils are rare and you can't replace them. PLEASE don't be so short sighted that you destroy the lovely display you have which not available anywhere else in the area or replaceable. Please treasure it.
Thank you,
Yvetta Williams

> On Feb 8, 2018, at 5:27 PM, Matt Waters <MattW@rpvca.gov> wrote:g
>
> Hi Yvetta,
>
> The plan that will be presented at the Feb. 21 workshop will include the Discovery Room (at current size) and a butterfly garden. A number of Ladera Linda HOA members have been advocating for the removal of the Discovery Room from the plan to be replaced with exhibit displays in the hallway and discovery carts. A survey that was distributed to residents near to LL asked respondents to weigh in on that suggestion. I believe this topic will come up at the workshop.
>
> As we've discussed, the items currently stored by the Docents at LL will need to be moved. While no location has been officially determined, I agree that PVIC is the logical location for their long-term storage.
>
> Let me know if you have any questions.
>
> Thanks,
>
> Matt

>
> -----Original Message-----
> From: Yvettawill@cox.net [mailto:yvettawill@cox.net]
> Sent: Friday, February 02, 2018 10:35 AM
> To: Matt Waters <MattW@rpvca.gov>
> Subject: Ladera Linda
>
> I will not be able to attend the meeting on LL.
>
> Are they still having the discovery room? Butterfly garden? Can the storage be moved to PVIC? These are important considerations. Thanks for watching out for us Matt.
> Yvetta Williams

D2

Matt Waters

From: Marcia Booth <mbinpv@gmail.com>
Sent: Wednesday, February 21, 2018 2:54 PM
To: CC
Cc: Cory Linder; Daniel Trautner; Matt Waters; Emily Rodin
Subject: Ladera Linda Park Master Plan
Attachments: Ladera Linda - Los Serenos.pdf

Good Afternoon,

On behalf of members of Los Serenos please see the attached letter addressing the Ladera Linda Park Master Plan.

Thank you

Marcia Booth
President, Los Serenos

D3

LOS SERENOS DE POINT VICENTE
POINT VICENTE INTERPRETIVE CENTER
31501 Palos Verdes Drive West
Rancho Palos Verdes, CA 90275
(310) 377-5370
www.losserenos.org • losserenos@rpv.com

February 21, 2018

Attn: City Council
The City of Rancho Palos Verdes
30940 Hawthorne Blvd.
Rancho Palos Verdes, CA 90275

Dear City Council Members:

When the Ladera Linda Park Master Plan design was presented to City Council in August 2017 it included a 30% reduction in size to address neighborhood concerns. It added no additional recreational elements while maintaining all of the existing elements.

As Los Serenos docents we are enthusiastic about this project. The existing buildings are in poor condition at best and are surely not up to current code. We see this re-design and rebuilding as a greatly enhanced use of park space and the improvement of a valuable City asset.

We are aware that there have already been suggestions made to reduce or eliminate the Discovery Room in the new design. We have quite a diverse collection of artifacts in the Discovery Room that incorporates all of the things that Los Serenos values and teaches to the community in our public hikes and tours. We feel that the Discovery Room should and must be maintained.

During the demolition and construction of the Ladera Linda property, all of the artifacts will have to be removed and stored. In the selection of storage space, we are asking that the City take into consideration the fragility of many of the artifacts and provide safe storage containers in a temperature controlled space until the artifacts can be returned to their new home.

We all look forward to seeing this project develop and come to fruition. Please keep the Discovery Room open.

Thank you for our attention and support

Marcia Booth

Marcia Booth, President of Los Serenos, and the undersigned docents and volunteers of Los Serenos

Los Serenos de Point Vicente is a 501(c)(3) nonprofit organization. Taxpayer Identification No. 95-4191603

Marna Booth
Henry Jergens
Bill Quinnette
Betty Bierman
Alexis Brinard
Jeffrey Long
Joe Marinelli
Denise Robinson
Noreen Marinelli
Eleanor Johnson
Cindy Shirley
Bob Shirley
Jerry Zellers
Johanna Corbett
Hetta Reeves
Elizabeth L. Hayes
Joan C. Barry

Matt Waters

From: Matt Waters
Sent: Wednesday, February 21, 2018 11:37 AM
To: 'Mickey Rodich'
Cc: herbertstark@cox.net
Subject: RE: Ladera Linda Letter to the City Council

Hi Mickey,

Thanks for the email and analysis of your survey. I was not able to access the link to the statistical results-password required. Please send me the results if possible.

Thanks,

Matt

From: Mickey Rodich [mailto:mickeyrodich@gmail.com]
Sent: Wednesday, February 21, 2018 9:28 AM
To: CC <CC@rpvca.gov>; Matt Waters <MattW@rpvca.gov>
Cc: Ann Weinland <annweinland@gmail.com>; Bill Gussman <wguss@cox.net>; Kelly Jones <kjones3298@msn.com>; Mariana Stewart <marianastewart@icloud.com>; Mickey Rodich <mickeyrodich@gmail.com> <mickeyrodich@gmail.com>; Phil Bernard <philbernard@challengercable.com>; Sara Platte <saraplatte@mac.com>; Tim Stewart <chesterdraws@protonmail.com>; Tom Smith <thomash.smith@gmail.com>; Herb Stark <stearman@juno.com>
Subject: Fwd: Ladera Linda Letter to the City Council

Recreation & Parks Department:

On Wednesday February 21st you will be conducting another Ladera Linda Park Master Plan workshop to discuss the results of the latest study as directed by the City Council to address the concerns of the local residents of Ladera Linda. I am sorry that I cannot attend this meeting because I am out of town. The Ladea Linda Homeowners Association (LLHOA) conducted a survey to present to you our vision for the proposed new Park. Sixty eight of our residents responded electronically and fifteen responded verbally to this survey. Our survey was conducted by using Survey Monkey and we asked 10 basic questions:

1) Preferred size of the Park building?

2) Basketball courts location due to noise generated?

3) Parking restrictions on Forrestal.?

4) Park security and cameras?

5) Park operating hours and activity restrictions?

6) Control of Forrestal traffic during activities such as AYSO?

7) Landscaping of Park grounds?

8) Construction costs?

9) ADA compliance?

10) Left turn accelerating lane at Forrestal and PVDS?

The bottom line is our desire to NOT have the new Ladera Linda Park become a destination attraction that will be advertised on Social Media and draw large crowds from outside our City and traffic congestion such as the Del Cerro Park disaster. This Park should be designed to satisfy the needs of our local residents. They are very concerned about crime, noise, parking, traffic congestion and they did not want the new facility to become a trail-head information center for the reserve. Our Survey showed that the vast majority of responses favor a low profile for the new Park. The responses we received are summarized in the Survey results and are briefly stated below:

1) Reduce the size of the building from the proposed 9,000 sq. ft. to 7,000 sq. ft. by eliminating one classroom and the Discovery Room. The Discovery Room is underutilized with only 13 group visits totaling around 800 visitors (mostly grade school students) in 2017. Ninety percent of these were children's educational tours conducted by the docents where the main object was the hike on the Forrestal Reserve. As such they only spend 15 minutes in the Discovery Room as an orientation to the hike. This could be accomplished using one of the open classrooms supported by a cart containing the teaching aids as they do for the whale wagon and outreach at the Interpretive Center. The Discovery Room is a low usage facility and does not need a committed room, it can use any available room.
2) Relocate the basketball courts and children's to a central location to reduce noise near residences.
3) Eliminate parking along Forrestal and have restricted resident only parking on Pirate and Searaven and moving the proposed ADA entrance to be along the present park entrance.
4) For Park security, install ALPR cameras and observation cameras on and near the Park site.
5) Limit Park activities that produce noise and control operating hours and activity restrictions.
6) Control traffic on Forrestal during large activities such as AYSO. Have large groups be responsible for a traffic control person at PVDS.
7) Keep a majority of the landscaping for the new park, especially along Forrestal to act as a noise barrier for the nearby residences.
8) Keep construction costs at the lowest levels by reducing the building size and saving most of the existing landscaping.
9) For ADA requirements, relocate the proposed ADA access to be alongside the Park entry roadway.
10) Require a left turn escape lane on PV Drive South at Forrestal and require anyone running a large event to provide traffic control at Forrestal and PVDS.

You can click on the Ladera Linda HOA Survey Summary below, regarding the Ladera Linda Park Master Plan. As you will see, our residents have unanimously expressed their opinions as to the size and features for the proposed Park Master Plan. They want a 7,000 sq. ft. building and do NOT want this Park to be an attraction that will be advertised on Social Media to draw large crowds of outsiders.

https://www.surveymonkey.com/analyze/cRItN0OIQ9pZeTB0REuoxpmSB9TC2GBBNovJjZJYSrQk5xcIabvcg R0SpXf5uX0U

Attachment #1: This is the diagram for the 9,137 sq ft building (with 65 parking places), that the Staff presented to the City Council at their meeting on August 1, 2017, that was

approved by the City Council. It includes the equivalent of 4 classrooms plus the Discovery Room. With the present usage average of 4 to 5 uses per week, this facility is way too large for it's present usage. The design of the building has numerous recesses instead of a squared off building and is not suitable for security purposes.

Attachment #2: In an effort to reduce the building cost, this option would reduce the building size to 8,000 sq ft (with 57 parking places). This option includes the equivalent of 3 classrooms plus the Discovery Room. This option is also too large for the present usage.

Attachment #3; In an effort to reduce the building cost even more, this option would further reduce the building size to approx, 7,000 sq ft (with 50 parking places). This option includes the equivalent of 3 classrooms and eliminates the Discovery Room. The Discovery Room is seldom used and can be replaced by adding glass exhibit cabinet displays in the lobby and following the program used at PVIC. That would mean providing a storage area for wheeled carts with additional displays and teaching aids that can be wheeled into any vacant classroom when needed.

Attachment #4; This is the site plan that the Staff presented to the City Council at their meeting on August 1,2017, that was approved by the City Council. It includes an ADA access gate at the intersection of Forrestal and Pirate and basketball courts near that intersection creating noise for nearby residents. This plan also allows street parking all along Forrestal.

Attachment #5: This option recommends only one full basketball court located in the center of the property to reduce noise levels for Ladera Linda and Sea View residents. It relocates the ADA access ramp to be parallel to the main Park entrance driveway and red lines the curbs on Forrestal so there is no parking allowed on Forrestal from the gate, all the way down to the end of the Park boundary. Also there is a request that the gate be opened at dawn and closed at dusk.

The following are the 5 attachments that belong to the Survey.

Ladera Linda Baseline Facility Layout Less Classroom
(Attachment 2)

In an effort to reduce the building cost, this option would reduce the building size to 8,000 sq ft (with 57 parking places). This option includes the equivalent of 3 classrooms plus the Discovery Room. This option is also too large for the present usage.

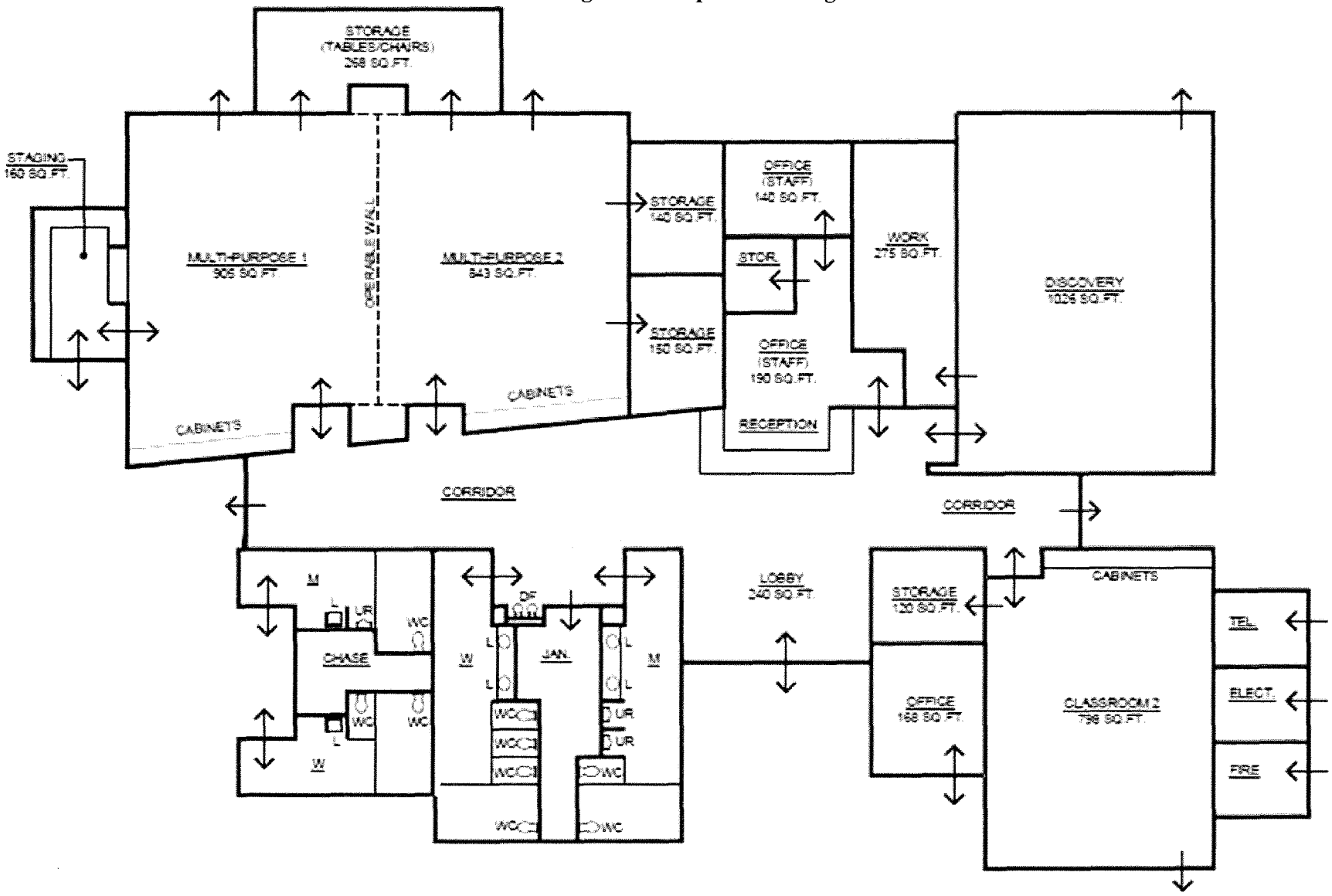

Ladera Linda Baseline Facility Layout
(Attachment 1)

This is the diagram for the 9,137 sq ft building (with 65 parking places), that the Staff presented to the City Council at their meeting on August 1, 2017, that was approved by the City Council. It includes the equivalent of 4 classrooms plus the Discovery Room. With the present usage average of 4 to 5 uses per week, this facility is way too large for it's present usage. The design of the building has numerous recesses instead of a squared off building and is not suitable for security purposes.

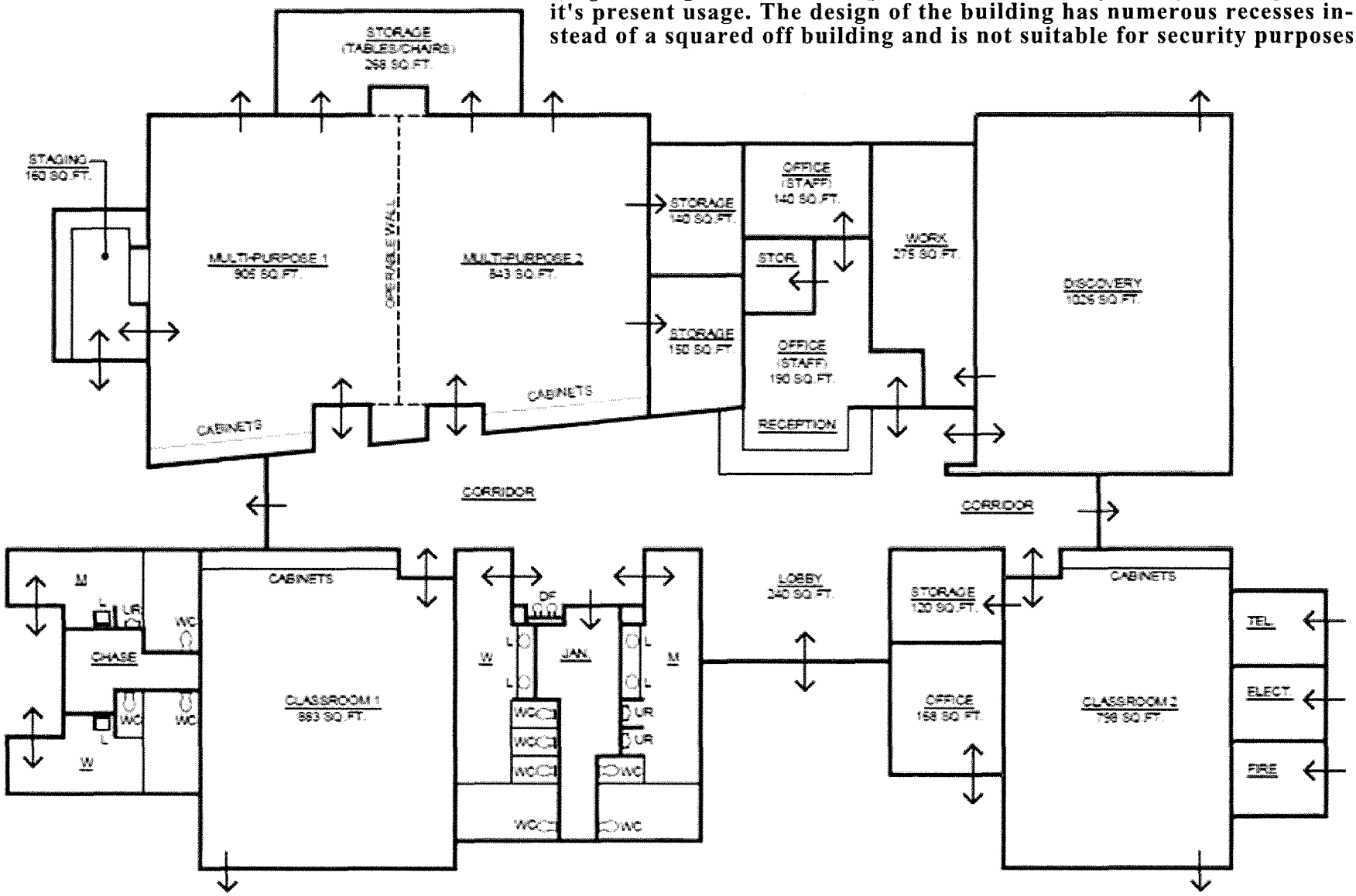

Ladera Linda Baseline Facility Layout
Less one Classroom and Descovery Room
(Attachment 3)

In an effort to reduce the building cost even more, this option would further reduce the building size to approx, 7,000 sq ft (with 50 parking places). This option includes the equivalent of 3 classrooms and eliminates the Discovery Room. The Discovery Room is seldom used and can be replaced by adding glass exhibit cabinet displays in the lobby. That would mean providing a storage area for wheeled carts with additional displays that can be wheeled into any vacant classroom when neededin support of a planned program.

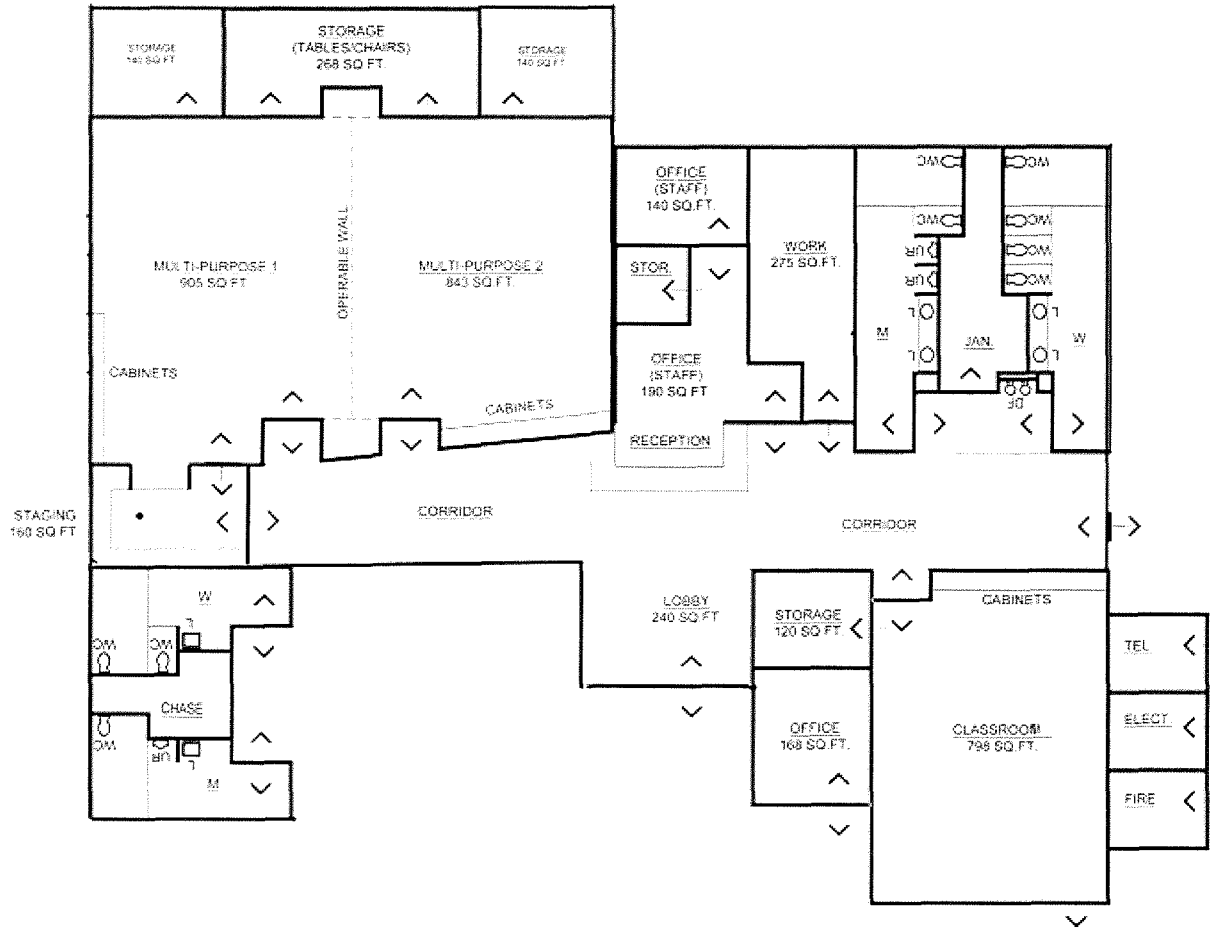

Ladara Linda Baseline Park Layout

Attachment 4

Proposed Changes to Baseline Relocation of Play Area

(Attachment 5)

This option recommends only one full basketball court located in the center of the property to reduce noise levels for Ladera Linda and Sea View residents. It relocates the ADA access ramp to be parallel to the main Park entrance driveway and red lines the curbs on Forrestal so there is no parking allowed on Forrestal from the gate, all the way down to the end of the Park boundary. Also there is a request that the gate be opened at dawn and closed at dusk.

Matt Waters

From: Matt Waters
Sent: Monday, February 12, 2018 4:01 PM
To: patricia stenehjem
Cc: Matt Waters; Mona Dill; Cory Linder
Subject: RE: Ladera Linda Park Plan

Hi Patricia,

Thank you for your email and your interest in this project. Let me assure you that your concerns about privacy and noise are definitely not being disregarded. At Council's direction we have gone back and done more research and design work on the building layout, security concerns, landscaping, and sightlines. In response to resident concerns, we are limiting the number and times for private rentals.

We have met with many residents since the concept was presented to Council to get more feedback. The February 21st Workshop will be an opportunity for us to both present this information to the community and also receive additional commentary and feedback. That feedback will be incorporated into a revised and refined concept plan to be presented to Council.

I'd like to address a few of the points in your email.

- The entrance to the park is not being changed.
- Landscaping changes reflect best practices for design and security.
- The lower field will be reconfigured to prevent organized sporting events like soccer while still allowing for casual drop in use.
- While there will be picnic tables and benches in the lower field area along a walking path they are not positioned directly adjacent to Forrestal.
- I am aware of the gate issues at Ladera Linda. We are looking at ways to address this, particularly increasing staff levels so they can lock the gates at dusk.

Again, thank you for your continuing to be a part of the project and I encourage you to come to the February 21st Workshop.

Sincerely,

Matt

Matt Waters
Senior Administrative Analyst

City of Rancho Palos Verdes
Recreation and Parks Department
30940 Hawthorne Blvd.
Rancho Palos Verdes, CA 90275
www.palosverdes.com/rpv
mattw@rpvca.gov - **(310) 544-5218 p** – (310) 544-5291 f

Parks Make Life Better!

From: patricia stenehjem [mailto:patsyanntoo@yahoo.com]
Sent: Friday, February 09, 2018 10:06 AM
To: Matt Waters <MattW@rpvca.gov>
Subject: Ladera Linda Park Plan

Hi Matt,

sometime (long) ago I emailed you my concerns regarding the plans for Ladera Linda Park; my concerns are still the same, and I have now learned that the privacy and noise issues that I and and my neighbors have with a new park design are apparently being disregarded. Changing the entrance to the park and removing the east side plants will not be good for the neighborhood, nor will putting picnic tables near Forrestal; I oppose any plans to do so. We already deal with noise from the Sunday soccer players who use the lower field. Also, security is an issue--most nights when I have checked the park gate, it has not been locked, and several times in the last two weeks I have had to call the sheriff after 8pm, asking for the Forrestal gate to be locked. It is exceptionally remiss to leave that gate open, due to the heightened fire danger now present all year! I remember you saying that you have a particular affinity for Ladera Linda--we need to keep it peaceful and safe as possible here.

Sincerely,
Patricia Stenehjem

Matt Waters

From: Matt Waters
Sent: Thursday, February 22, 2018 1:40 PM
To: macsyl20202@yahoo.com
Cc: Matt Waters
Subject: LL workshop response

Hi Sylvia,

I received your voicemail about the Ladera Linda Park Master Plan. Thank you for attending last night's meeting and sorry you had to leave early. I thought we had a great turnout and many insightful comments and questions from the community. I hope you found the presentation helpful.

As to the timeline, it is far from set. We will be taking an updated plan to the City Council on March 20th for Master Plan adoption. Our best timeline estimate, if Council approves the Master Plan and we move forward into a preconstruction design phase, is 18-24 months if the process runs smoothly.

Regarding your turf question, I am happy to let you know that the plan calls for natural turf in the lower park area. In fact, all of the areas marked "turf" in the design are "natural turf" grass areas. We'll make a note of that in future presentations and in our Staff report to Council, so there is no further misunderstanding on that point.

Again, thank you for being part of the process and please feel free to contact me with any further questions or concerns.

Sincerely,

Matt Waters
Senior Administrative Analyst

City of Rancho Palos Verdes
Recreation and Parks Department
30940 Hawthorne Blvd.
Rancho Palos Verdes, CA 90275
www.palosverdes.com/rpv
mattw@rpvca.gov - **(310) 544-5218 p** – (310) 544-5291 f

Parks Make Life Better!

Matt Waters

From: syl mac <macsyl2020@yahoo.com>
Sent: Thursday, February 22, 2018 2:33 PM
To: Matt Waters
Subject: Re: LL workshop response

Hello Matt,

Thanks so much for the clarification. So "TURF" on the design schematics stands for natural grass? I think that would be a great point of clarification in the future images. Thanks for keeping it natural.

I thought the park as well as the building design was very pleasing to the eyes and am so happy we will now have gorgeous ocean views instead of unsightly overgrown trees and bushes blocking our stellar sightlines. That is if I understood the images correctly?

Yours,

Sylvia Maciá Shafiezadeh

Sent by my mind via The Force

From: Matt Waters <MattW@rpvca.gov>
To: "macsyl2020@yahoo.com" <macsyl2020@yahoo.com>
Cc: Matt Waters <MattW@rpvca.gov>
Sent: Thursday, February 22, 2018 1:42 PM
Subject: FW: LL workshop response

Hi Sylvia,

I received your voicemail about the Ladera Linda Park Master Plan. Thank you for attending last night's meeting and sorry you had to leave early. I thought we had a great turnout and many insightful comments and questions from the community. I hope you found the presentation helpful.

As to the timeline, it is far from set. We will be taking an updated plan to the City Council on March 20th for Master Plan adoption. Our best timeline estimate, if Council approves the Master Plan and we move forward into a preconstruction design phase, is 18-24 months if the process runs smoothly.

Regarding your turf question, I am happy to let you know that the plan calls for natural turf in the lower park area. In fact, all of the areas marked "turf" in the design are "natural turf" grass

areas. We'll make a note of that in future presentations and in our Staff report to Council, so there is no further misunderstanding on that point.

Again, thank you for being part of the process and please feel free to contact me with any further questions or concerns.

Sincerely,

Matt Waters
Senior Administrative Analyst

City of Rancho Palos Verdes
Recreation and Parks Department
30940 Hawthorne Blvd.
Rancho Palos Verdes, CA 90275
www.palosverdes.com/rpv
mattw@rpvca.gov - **(310) 544-5218** p – (310) 544-5291 f

Parks Make Life Better!

Matt Waters

From: BW Riedman <rabbit943@gmail.com>
Sent: Thursday, February 22, 2018 3:53 PM
To: Matt Waters; Cory Linder; Daniel Trautner
Cc: CC
Subject: Ladera Linda Community Center

Hi

I just want you to know that I thought the presentation of the proposed plans for the Ladera Linda Community Center were very well presented. Y'all have worked very hard to try and fit in everything wanted and not wanted and I think this plan is a good one. Not too big but large enough to accommodate small groups and events.

As you well know, you cannot please everyone. My take on last night is that the Ladera Linda residents cannot separate the problems with the hikers/bikers and AYSO from the community center which has NEVER been a big draw. And the people who do use it are generally residents. I am truly getting tired of the NIMBY attitude that I see more and more in RPV. If you want to keep the riffraff out, make this a gated community like Rolling Hills. You say it's for the public but which public? Only the residents that live within so many feet of it?

It seemed to me that the biggest objection, over and over, was the traffic and parking. And I would venture a guess that 99% of the traffic issues have nothing to do with the community center. And when are all the so-called "traffic/parking" issues? I would probably be safe in assuming on the weekends when there are AYSO games and people hiking - very few of which probably don't even bother with the center (other than to use the bathroom). The traffic situation at the intersection of PVDrive South and Forrestal is another issue entirely and shouldn't even be in this discussion. Yes, there is an problem at that intersection. The fix is easy - put in a traffic light with sensors that would favor PVDrive South. BUT! I would bet the folks living on those corners would howl about that! They don't want the noise of cars stopping and starting or exhaust. OK - put a timer on the light so it's only active from 7 am to 10 am and from 4 pm to 6 pm (or whenever there is rush hour traffic).

The Ladera Linda Community Center is the only community center on this side of The Hill. And for people to object to non-RPV families using it is mean and petty and selfish. You cannot tell me that the people that enjoy Hesse Park only live in RPV.

Forrestal Nature Reserve is very special. The trails are not that difficult and the vista views are beyond belief. The residents do not want to share these. I'm sorry, that's not right. And the City cannot be blamed for the so-called "social media" exposure.

On to the Community Center itself -- Herb's comments re the Discovery Room are specious at most. For one thing, I think the Discovery Room is a well kept secret. Last night I had two residents tell me that they didn't even know it existed until they were at Ladera Linda for the Parks event. They and their children were blown away by the photos and history it represents. Ladera Linda has been rather neglected by the City. No full time staff (which you say will be corrected) and about the only thing the City has supported has been the school and organization hikes that are provided by the docents. The Discovery Room was created to not only preserve items related to RPV and the area but to share them with the children. Perhaps with a full time staff member on-site, the room can be opened full-time to the public and maybe even a docent assigned on a daily basis to answer questions, etc.

I hope you have personally gone to check out the Discovery Room and to actually see what it has to offer. It's very special and a lot of effort was put into it to make it as wonderful, informative and educational as it is.

I know this is rather long but I do hope you will keep the community center as it is now planned. I would venture to assume that all the same objections will be presented over and over again by the same people every time you have a community outreach meeting.

Thank you.

Betty Riedman

Matt Waters

From: Herb Stark <pt17stearman@gmail.com>
Sent: Thursday, February 22, 2018 4:29 PM
To: Matt Waters
Subject: Re: Ladera Linda Survey Results

Hi Matt,

From what I saw at the meeting the issues that the residents were concerned about were not adequately addressed. I understand your position AYSO and left turn lanes are not driven by the park per say but the fear is that the new facility will attract more visitors to both the park and the trails and you cannot look at the park as an isolated project. We do not want another Del Cerro. We have very little control because of multi media. Somehow we need to come to grips with the issue.

One thing you need to do if you leave the Discovery Room in is insist that a condition for having the room, the Docents have someone there. One problem with the site is the docents have never been able to get a volunteer. Now all it is a storage room for artifacts and is only open for the docent tours of the reserve.

Herb

On Thu, Feb 22, 2018 at 2:55 PM, Matt Waters <MattW@rpvca.gov> wrote:

Hi Herb,

Thanks for the info and for being at the meeting last night.

Matt

From: Herb Stark [mailto:pt17stearman@gmail.com]
Sent: Wednesday, February 21, 2018 2:54 PM
To: Matt Waters <MattW@rpvca.gov>
Subject: Ladera Linda Survey Results

Hi Matt,

Attached are the results of the survey taken by the Ladera Linda HOA.

Matt Waters

From: Yvetta Williams <yvetta2@gmail.com>
Sent: Friday, February 23, 2018 1:33 PM
To: CC
Subject: Ladera Linda redo and please keep the feeling of the discovery room.
Attachments: HARAASNGA 1.docx; ATT00001.htm

PLEASE KEEP the Discovery room and PLEASE do not let the Ladera Linda residents get by with their suggestion for hallway displays and discovery carts in place of a discovery room. The displays are too fragile to be in portable carts. Adults as well as children need this information. You have a wonderful nature room now that cannot be duplicated. The room gives an overall of what is in Palos Verdes. It took years to get all the items together. It is a great place to teach about what is at Palos Verdes. A lot of time and effort was spent putting that room together and many of the items cannot be replaced or duplicated. To some people nature is NOT important and to others it is ALL important. PLEASE fight for it and know you will NEVER get another room with everything together like that room. The butterfly collection is 80 years old and was collected when I was a child and with the help of a neighbor who was a science teacher myself and my mother, they were ID's and got mounted. The butterfly garden is very special and Leslie Williamson is wonderful. Don't throw her away either.

Where would you get another bear skin? It was bought Many years ago and it is in the room because there were bears all over this area. Children and adults are really surprised at that. You read about bears going in swimming pools in Pasadena nearer the mountains. There were bears all over our area before they were all killed. There is a collection of all the abalone shell varieties that are in S. Calif and things in our tidal pools and how sea shells grow. It takes years for a shell to get big enough to see. The shells were left over from our store when I retired, and are hard to find and some cannot be sold as they are on the endangered specie list. The display tells about the peacocks, peahens and peachicks and eggs and how they got to Palos Verdes. There is a display on the native plants. Hands on rocks and minerals. Humming birds, raptors, endangered specie birds, ground squirrels, fox, raccoons, owls, skunks, possums, None of the schools or the parks have this information. You have something special Please do not let it get away.

The reptiles, insects, spiders of our area are on display, We need to teach which are safe and that ALL are our friends and how to act around them and why we shouldn't kill them. To have wonderful pictures of birds taken by Steve Wolfe and to find the real bird nest matching the bird is special. Steve has moved out of the area.

The artifacts of the indigenous people found in the area are special. Palos Verdes had many different Indio communities and the people went by the name of the community where they lived. Abalone Cove and Point Vicente were called Haraasnga. San Nicolas Island was also called Haraasnga and people lived in both places and boated between them. Haraasnga meant things that stand up. (Rocks by Terranea) similar looking rocks at San Nicolas Island. The community at White Point was called Tovemungna, the place of the rabbit. They boated to Catalina Island which was called Pimunga. Soapstone was mined in Catalina and traded for items the Pimu needed there. The store room that PVIC is using at Ladera Linda has priceless things from the Indio communities. One well known community was at Malaga cove area was Chowingna. Suangna (Place of the reeds now known as Machado Park is where they got their tules and there is wonderful history. They could boat from the marsh all the way to the ocean.

D22

The Historical Society has a wonderful collection of artifacts that were at Malaga Cove school. There should be a room set aside for that exceptional collection. Where there were fresh water springs there were communities. Many of those same springs are still running today. Increase the size of the building to include the history of the early people who lived here before the European explorers. That would be wonderful!!!

In the discovery room there is a small collection of real artifacts from the area and displays telling what the native people used for food and about their trade. We actually need another room just for displays on this area before the Europeans arrived and before they changed everything. People lived here for 7-10,000 years and had all they needed to survive. They had an extensive trade route and took care of their needs. This hasn't been taught in the schools and we could do it with displays at Ladera Linda. We also have displays of local fossils and rocks and minerals. It would be very difficult to get all the items in the discovery room together again. Please treasure it. Please don't be so short sighted that you destroy what you already have and which is not available anywhere else in the area. Please treasure it. I would be very happy to give the council a tour of the discovery room and share with you the treasures of our area.

Thank you,
Yvetta Williams

Matt Waters

From: Jim Hevener <jhevener@cox.net>
Sent: Tuesday, February 27, 2018 10:10 AM
To: Matt Waters
Cc: Ken Dyda; susanbrooks01@yahoo.com; john@johncruikshank.us; eric@ericalegria.com
Subject: Comments from Ladera Linda Outreach Meeting

Mr. Waters

On behalf of the Mediterrania HOA, I want to thank City Staff and the Consultant for an excellent presentation. It seemed the clear consensus at the meeting was in support of moving forward with the current design, which strikes a reasonable balance between the needs and desires of the residents of the immediately surrounding neighborhoods. We will never have a perfect plan that will make everyone happy, as expressed by some at the meeting, but this about as close as we will get. It seems that every change proposed at the meeting raised a counter-issue of about equal importance (such as moving the basketball courts or adding a buffer wall). While no one is thrilled, this is usually the sign of a good consensus.

Jim Hevener, President MHOA

Here are my personal comments on specifics issues raised during the meeting:

(1) Proposed Square Footage – I am opposed to any reduction in the square footage and feel it actually should be a little larger – more like 12,000 sq.ft with a 3rd classroom. The total area already has been reduced to ½ or less than the current total (including covered walkways). We are nearing a point where it will be too small to justify the cost. We should have a Community Center that fosters community interaction and serves the needs of the community for the next 30 years; not just today. A 9,000 square foot building is no Taj Mahal or PVIC.

(2) Discovery Room – I strongly support the Discovery Room. This is a very special collection and making a separate trip to see it in a nice location is worth the investment. I am against moving and consolidating the collection with PVIC, which already is a large facility with a very different feel. I understand that the value and fragile nature of many of the unique specimens means it is not viable to house the specimens in a mobile unit or in temporary displays. The Discovery Room also brings together Docents who have so much to offer and younger members of the community who have much to learn. We are truly blessed to have these volunteers. I have spoken to numerous parents of children at Mira Cat who feel the same way but it is difficult for them to attend these meetings in the evening.

(3) ADA ramp – I understand the concern of LL residents but would hope the proposal to red stripe Forrestal and consider restrictions on Pirate should be sufficient. Adding close to $150,000 in cost is not a reasonable approach.

(4) Parking on Forrestal above gate. If this is something the LL neighbors really want then it seems like a good idea. The issue, though, is that this accommodation may attract more people to the Preserve. We are at a point where any solution is at least perceived to cause more problems. Perhaps a phased approach is better for this piece. See how things go and if the parking is later warranted, the City can add it. It does not seem like this is a necessary component of the Plan and should not stop the City from moving forward.

(5) Open Views Into Park – Sheriff Dept. analysis supports open views into and out of the Park for enhanced security. This seems like a good idea. While having a view of the Ocean may attract some additional people, it

seems worth it for enhanced security. It also seems that the buffer area of low shrubs between the paths and the fence line will protect the privacy of the SV homes below the Park. There is no way to make a perfect design.

(6) Basketball Court. It is important to keep the basketball courts with the other playground equipment. I hope the final design can include some hardtop to take the place of the ½ basketball court now eliminated from the plan. This would be for kids to bounce balls and maybe practice learning to ride a bike. It seems like the elimination of the ½ court was a mistake and an accommodation that is starting to undermine the purpose and value of the Park, with very limited upside. Parks involve some amount of noise. So do neighbors who have basketball hoops in their driveways.

(7) Hours of Operation and Use Restrictions. These should be guidelines and not part of the City Code. The Sheriff's representative indicated they have the authority to address excessive noise or after-hours loitering with existing authority. I understand the desire of the LL neighbors to keep the new Community Center from becoming a Wayfarers Chapel. The current plan and proposed rules do this. But, the City also should be supporting the use of the new Community Center as a location to bring members of the community together. City Staff should work with clear guidelines to respect the neighbors but also should have the flexibility to make exceptions or modify the rules in consultation with the community. I disagree that the days of community functions and activities are over. It is particularly important to support activities for older members of the community (such as exercise, yoga and art classes) and activities to bring older and younger/newer members of the community together (such as through the Docents at the Discovery Center or through community events).

(8) Traffic. The complaints about traffic seem reasonable but do not appear linked to the modest use of the proposed Community Center. Instead, the issues seem driven by AYSO and Trump National events. The LL residents should continue to press the School District to address AYSO traffic and the City should work with LL residents to address Trump and traffic in general. The redevelopment project should not be held up. This is an issue that should be addressed through the City's traffic commission or similar body. While I am not happy for the City to underwrite the cost of traffic control for AYSO and Trump events, it does seem like a good interim solution. As for a traffic light, my guess is that half of LL residents would want one but the other half would not. We have faced the same issue at the intersection of Ganado and PVDSouth, but were not able to gain a clear consensus in favor of a traffic light.

in consultation with the community. I disagree that the days of community functions and activities are over. It is particularly important to support activities for older members of the community (such as exercise, yoga and art classes) and activities to bring older and younger/newer members of the community together (such as through the Docents at the Discovery Center or through community events).

(8) Traffic. The complaints about traffic seem reasonable but do not appear linked to the modest use of the proposed Community Center. Instead, the issues seem driven by AYSO and Trump National events. The LL residents should continue to press the School District to address AYSO traffic and the City should work with LL residents to address Trump and traffic in general. The redevelopment project should not be held up. This is an issue that should be addressed through the City's traffic commission or similar body. While I am not happy for the City to underwrite the cost of traffic control for AYSO and Trump events, it does seem like a good interim solution. As for a traffic light, my guess is that half of LL residents would want one but the other half would not. We have faced the same issue at the intersection of Ganado and PVDSouth, but were not able to gain a clear consensus in favor of a traffic light.

Matt Waters

From: Matt Waters
Sent: Wednesday, February 28, 2018 11:45 AM
To: Charles Agnew
Cc: Cory Linder; CC; Matt Waters
Subject: RE: Ladera Linda Park Plan

Hi Charles,

Thanks for your email and for attending last week's workshop. Appreciate hearing that you think were on the right track. Your comments about current and past usage levels, square footage, retaining the Discovery Room, red-striping Forrestal, providing Preserve parking away from residences, and including a stairway to Forrestal Drive will be considered by Staff and our consultant and will also be included as part of the March 20th City Council Staff report.

Please feel free to contact me with any further comments or concerns.

Sincerely,

Matt Waters
Senior Administrative Analyst

City of Rancho Palos Verdes
Recreation and Parks Department
30940 Hawthorne Blvd.
Rancho Palos Verdes, CA 90275
www.palosverdes.com/rpv
mattw@rpvca.gov - **(310) 544-5218 p** – (310) 544-5291 f

Parks Make Life Better!

From: Charles Agnew [mailto:cvagnew@cox.net]
Sent: Wednesday, February 28, 2018 10:36 AM
To: Matt Waters <MattW@rpvca.gov>
Cc: CityClerk <CityClerk@rpvca.gov>; Doug Willmore <DWillmore@rpvca.gov>; CityManager <CityManager@rpvca.gov>; Planning <Planning@rpvca.gov>; CC <CC@rpvca.gov>; Melissa Countryman <MelissaC@rpvca.gov>; Mona Dill <MonaD@rpvca.gov>; Jerry Duhovic <Jerry.Duhovic@rpvca.gov>; Jerry Duhovic@hotmail.com <jduhovic@hotmail.com>; Ken Dyda <cprotem73@cox.net>; Finance <Finance@rpvca.gov>; Nicole Jules <NicoleJ@rpvca.gov>; Sean Larvenz <SeanL@rpvca.gov>; Cory Linder <CoryL@rpvca.gov>; Ara Mihranian <AraM@rpvca.gov>; Parks <Parks@rpvca.gov>; PublicWorks <PublicWorks@rpvca.gov>; Pamela Mitchell <PamelaM@rpvca.gov>; Joel Rojas <JoelR@rpvca.gov>; Nancie Silver <NancieS@rpvca.gov>; Michael Throne

<MichaelT@rpvca.gov>; Daniel Trautner <DanielT@rpvca.gov>; Matt Waters <MattW@rpvca.gov>
Subject: Ladera Linda Park Plan

Hi, I am Charles Agnew a 46 year resident of Ladera Linda and a past Homeowner's president multiple times.

First, you are on the right track. I like what I see.

The present activities at Ladera Linda Park should not be used as an indication of future activity.
The park is extremely run down and has long lost its appeal. It is a ghost town. It is only a reminder of a past time when there were sports activities, square dancing, children's birthday parties,
Christmas dances, Halloween fun houses, neighborhood block parties, neighborhood dinner dances, and etcetera.
It can be that again.

The clubhouse square foot is about right. There should be a kitchen with appropriate facilities.
The other night we had about 50 people in the multipurpose room and it was full. The new multipurpose room should be larger.

Don't eliminate the discovery room.

We need to eliminate the Forrestal street parking. Provide as many parking spaces as possible near the trail access.
That parking must be used as overflow parking when we have a park activity such as the Easter egg hunt.
That means we need a stairway from the overflow parking down to the park. If we red curb Forrestal, we need this stairway.

Again, thank you for your efforts. Good job.

Matt Waters

From: Matt Waters
Sent: Wednesday, February 28, 2018 11:50 AM
To: Jerry
Cc: Cory Linder; Matt Waters
Subject: RE: Ladera Linda Master Plan Design Concept A-1

Hi Jerry

Thanks for your email about the Ladera Linda Park Master Plan. Your comments about the square footage being appropriate in size, inclusion of the Discovery Room, the ADA ramp location, view/security issues, Preserve parking, and maintaining the proposed basketball court locations will all be considered by Staff and our consultant and will also be included as part of the March 20th City Council Staff report.

Please feel free to contact me with any further comments or concerns.

Sincerely,

Matt Waters
Senior Administrative Analyst

City of Rancho Palos Verdes
Recreation and Parks Department
30940 Hawthorne Blvd.
Rancho Palos Verdes, CA 90275
www.palosverdes.com/rpv
mattw@rpvca.gov - **(310) 544-5218 p** – (310) 544-5291 f

Parks Make Life Better!

From: Jerry [mailto:jhashimoto3@cox.net]
Sent: Tuesday, February 27, 2018 5:30 PM
To: Matt Waters <MattW@rpvca.gov>
Subject: Ladera Linda Master Plan Design Concept A-1

We like:

- The current proposed size and schematic floor plan and elevations of the new Community Center building;
- Having a Discovery Room included in the Community Center;
- The location of the ADA ramp in Exhibit "C;"
- The open views from the park of the ocean and the site plan with lower landscaping providing a much safer environment for users;

- The one full court, and half court for the younger children and their location adjacent to the play and turf areas near the entrance;
- The location of the 90 degree parking spaces between the two security fences and gates.

It will be a very attractive and welcome change to the area.

Jerry Hashimoto

Matt Waters

From: Matt Waters
Sent: Wednesday, February 28, 2018 3:54 PM
To: Jim Hevener
Cc: Ken Dyda; susanbrooks01@yahoo.com; john@johncruikshank.us; eric@ericalegria.com; Cory Linder; Matt Waters
Subject: RE: Comments from Ladera Linda Outreach Meeting

Hi Jim,

Thanks for your email and for attending last week's workshop. Appreciate your feedback on the meeting and I certainly agree that finding a solution that pleases everyone 100% is unattainable, but I think we have done our best to reach out to the community and create a balanced approach. All of your comments below will be considered by Staff and our consultant and will also be included as part of the March 20th City Council Staff report.

Please feel free to contact me with any further comments or concerns.

Sincerely,

Matt Waters
Senior Administrative Analyst

City of Rancho Palos Verdes
Recreation and Parks Department
30940 Hawthorne Blvd.
Rancho Palos Verdes, CA 90275
www.palosverdes.com/rpv
mattw@rpvca.gov - **(310) 544-5218 p** – (310) 544-5291 f

Parks Make Life Better!

From: Jim Hevener [mailto:jhevener@cox.net]
Sent: Tuesday, February 27, 2018 10:10 AM
To: Matt Waters <MattW@rpvca.gov>
Cc: Ken Dyda <Ken.Dyda@rpvca.gov>; susanbrooks01@yahoo.com; john@johncruikshank.us; eric@ericalegria.com
Subject: Comments from Ladera Linda Outreach Meeting

Mr. Waters

On behalf of the Mediterrania HOA, I want to thank City Staff and the Consultant for an excellent presentation. It seemed the clear consensus at the meeting was in support of moving forward with the current design, which strikes a reasonable balance between the needs and desires of the residents of the immediately surrounding neighborhoods. We will never have a perfect plan that will make everyone happy, as expressed by some at the meeting, but this about as

close as we will get. It seems that every change proposed at the meeting raised a counter-issue of about equal importance (such as moving the basketball courts or adding a buffer wall). While no one is thrilled, this is usually the sign of a good consensus.

Jim Hevener, President MHOA

Here are my personal comments on specifics issues raised during the meeting:

(1) Proposed Square Footage – I am opposed to any reduction in the square footage and feel it actually should be a little larger – more like 12,000 sq.ft with a 3rd classroom. The total area already has been reduced to ½ or less than the current total (including covered walkways). We are nearing a point where it will be too small to justify the cost. We should have a Community Center that fosters community interaction and serves the needs of the community for the next 30 years; not just today. A 9,000 square foot building is no Taj Mahal or PVIC.

(2) Discovery Room – I strongly support the Discovery Room. This is a very special collection and making a separate trip to see it in a nice location is worth the investment. I am against moving and consolidating the collection with PVIC, which already is a large facility with a very different feel. I understand that the value and fragile nature of many of the unique specimens means it is not viable to house the specimens in a mobile unit or in temporary displays. The Discovery Room also brings together Docents who have so much to offer and younger members of the community who have much to learn. We are truly blessed to have these volunteers. I have spoken to numerous parents of children at Mira Cat who feel the same way but it is difficult for them to attend these meetings in the evening.

(3) ADA ramp – I understand the concern of LL residents but would hope the proposal to red stripe Forrestal and consider restrictions on Pirate should be sufficient. Adding close to $150,000 in cost is not a reasonable approach.

(4) Parking on Forrestal above gate. If this is something the LL neighbors really want then it seems like a good idea. The issue, though, is that this accommodation may attract more people to the Preserve. We are at a point where any solution is at least perceived to cause more problems. Perhaps a phased approach is better for this piece. See how things go and if the parking is later warranted, the City can add it. It does not seem like this is a necessary component of the Plan and should not stop the City from moving forward.

(5) Open Views Into Park – Sheriff Dept. analysis supports open views into and out of the Park for enhanced security. This seems like a good idea. While having a view of the Ocean may attract some additional people, it seems worth it for enhanced security. It also seems that the buffer area of low shrubs between the paths and the fence line will protect the privacy of the SV homes below the Park. There is no way to make a perfect design.

(6) Basketball Court. It is important to keep the basketball courts with the other playground equipment. I hope the final design can include some hardtop to take the place of the ½ basketball court now eliminated from the plan. This would be for kids to bounce balls and maybe practice learning to ride a bike. It seems like the elimination of the ½ court was a mistake and an accommodation that is starting to undermine the purpose and value of the Park, with very limited upside. Parks involve some amount of noise. So do neighbors who have basketball hoops in their driveways.

(7) Hours of Operation and Use Restrictions. These should be guidelines and not part of the City Code. The Sheriff's representative indicated they have the authority to address excessive noise or after-hours loitering with existing authority. I understand the desire of the LL neighbors to keep the new Community Center from becoming a Wayfarers Chapel. The current plan and proposed rules do this. But, the City also should be supporting the use of the new Community Center as a location to bring members of the community together. City Staff should work with clear guidelines to respect the neighbors but also should have the flexibility to make exceptions or modify the rules

Matt Waters

From: Matt Waters
Sent: Wednesday, February 28, 2018 4:00 PM
To: joan barry
Cc: Cory Linder; Matt Waters
Subject: RE: LL Master Plan

Hi Joan,

Hope all is well with you.

Thanks for your email regarding the Ladera Linda Park Master Plan. Your comments about the overall plan, concern about mitigating neighborhood concerns and retaining the Discovery Room will be considered by Staff and our consultant and will also be included as part of the March 20th City Council Staff report.

Please feel free to contact me with any further comments or concerns.

Sincerely,

Matt

Matt Waters
Senior Administrative Analyst

City of Rancho Palos Verdes
Recreation and Parks Department
30940 Hawthorne Blvd.
Rancho Palos Verdes, CA 90275
www.palosverdes.com/rpv
mattw@rpvca.gov - (310) 544-5218 p – (310) 544-5291 f

-----Original Message-----
From: joan barry [mailto:itsthebarrys@cox.net]
Sent: Saturday, February 24, 2018 10:09 AM
To: Matt Waters <MattW@rpvca.gov>
Subject: LL Master Plan

Matt:

I just briefly reviewed the master plan for Ladera Linda, and at first glance, I think it's a wonderful concept. I have not been involved in any of the meetings or workshops, so I am not familiar with any complaints. But I would say that I think all the neighbors' concerns should be mitigated before going ahead. Having said that, I feel it would be a wonderful asset to the city, as this property has been underused for years.

I also think that the Discovery Room should be maintained. It is a great asset to the children' s tours and other guests. The proposed building is large, therefore there is plenty of room to house the Discovery Room. Should it be another PVIC? Of course not. But it is a nice annex.

Best wishes,

Joan Barry

To be shared with whomever would be interested.

Matt Waters

From: Matt Waters
Sent: Wednesday, February 28, 2018 4:04 PM
To: Edward Stevens
Cc: CC; Mona Dill; Cory Linder; Matt Waters
Subject: RE: Ladera Linda Letter to the City Council

Hi Ed,

Thanks for your email and for your continued interest in the Ladera Linda Park Master Plan Report. Staff did receive the results of the survey that Mickey conducted. Those survey results, including reducing the square footage and eliminating the Discovery room, along with comments received both at the Feb. 21 workshop and the subsequent comment period, will all be considered and included as part of the staff report being presented to the City Council on March 20, 2018.

Please feel free to contact me with any additional questions or concerns.

Sincerely,

Matt

Matt Waters
Senior Administrative Analyst

City of Rancho Palos Verdes
Recreation and Parks Department
30940 Hawthorne Blvd.
Rancho Palos Verdes, CA 90275
www.palosverdes.com/rpv
mattw@rpvca.gov - **(310) 544-5218 p** – (310) 544-5291 f

Parks Make Life Better!

From: Edward Stevens [mailto:ezstevens@cox.net]
Sent: Friday, February 23, 2018 10:08 PM
To: Matt Waters <MattW@rpvca.gov>
Cc: CC <CC@rpvca.gov>; Mona Dill <MonaD@rpvca.gov>
Subject: Ladera Linda Letter to the City Council

Dear Matt,
My neighbor & friend Mr. Mickey Rodich has some wonderful ideas for the Ladera Linda improvements that I and my neighbors in Seaview totally agree with.
I hope you will really take a few minutes & reconsider his ideas into the final plans especially reducing the size of the building to 7000 sq. feet. I have been playing paddle tennis for over 30 years & have seen the school buses show up &

the children taking 5 minutes to walk thru the Discovery room because they are more interested in taking the hike. Like Mickey, I see very little use of the Discovery Room.
We do not want our Ladera Linda to turn into a destination attraction on the Social media.
It is not too late to make the small changes that Mr. Rodich suggests.
Sincerely
Edward Stevens
40 year resident of Seaview

From: Mickey Rodich [mailto:mickeyrodich@gmail.com]
Sent: Wednesday, February 21, 2018 9:28 AM
To: CC; Matt Waters
Cc: Ann Weinland; Bill Gussman; Kelly Jones; Mariana Stewart; Mickey Rodich; Phil Bernard; Sara Platte; Tim Stewart; Tom Smith; Herb Stark
Subject: Fwd: Ladera Linda Letter to the City Council

Recreation & Parks Department:

On Wednesday February 21st you will be conducting another Ladera Linda Park Master Plan workshop to discuss the results of the latest study as directed by the City Council to address the concerns of the local residents of Ladera Linda. I am sorry that I cannot attend this meeting because I am out of town. The Ladea Linda Homeowners Association (LLHOA) conducted a survey to present to you our vision for the proposed new Park. Sixty eight of our residents responded electronically and fifteen responded verbally to this survey. Our survey was conducted by using Survey Monkey and we asked 10 basic questions:

1) Preferred size of the Park building?

2) Basketball courts location due to noise generated?

3) Parking restrictions on Forrestal.?

4) Park security and cameras?

5) Park operating hours and activity restrictions?

6) Control of Forrestal traffic during activities such as AYSO?

7) Landscaping of Park grounds?

8) Construction costs?

9) ADA compliance?

10) Left turn accelerating lane at Forrestal and PVDS?

The bottom line is our desire to NOT have the new Ladera Linda Park become a destination attraction that will be advertised on Social Media and draw large crowds from outside our City and traffic congestion such as the Del Cerro Park disaster. This Park should be designed to satisfy the needs of our local residents. They are very concerned about crime, noise, parking, traffic congestion and they did not want the new facility to become a trail-head information center for the reserve. Our Survey showed that the vast majority of responses favor a low profile for the new Park. The responses we received are summarized in the Survey results and are briefly stated below:

1) Reduce the size of the building from the proposed 9,000 sq. ft. to 7,000 sq. ft. by eliminating one classroom and the Discovery Room. The Discovery Room is underutilized with only 13 group visits totaling around 800 visitors (mostly grade school students) in 2017. Ninety percent of these were children's educational tours conducted by the docents where the main object was the hike on the Forrestal Reserve. As such they only spend 15 minutes in the Discovery Room as an orientation to the hike. This could be accomplished using one of the open classrooms supported by a cart containing the teaching aids as they do for the whale wagon and outreach at the Interpretive Center. The Discovery Room is a low usage facility and does not need a committed room, it can use any available room.
2) Relocate the basketball courts and children's to a central location to reduce noise near residences.
3) Eliminate parking along Forrestal and have restricted resident only parking on Pirate and Searaven and moving the proposed ADA entrance to be along the present park entrance.
4) For Park security, install ALPR cameras and observation cameras on and near the Park site.
5) Limit Park activities that produce noise and control operating hours and activity restrictions.
6) Control traffic on Forrestal during large activities such as AYSO. Have large groups be responsible for a traffic control person at PVDS.
7) Keep a majority of the landscaping for the new park, especially along Forrestal to act as a noise barrier for the nearby residences.
8) Keep construction costs at the lowest levels by reducing the building size and saving most of the existing landscaping.
9) For ADA requirements, relocate the proposed ADA access to be alongside the Park entry roadway.
10) Require a left turn escape lane on PV Drive South at Forrestal and require anyone running a large event to provide traffic control at Forrestal and PVDS.

You can click on the Ladera Linda HOA Survey Summary below, regarding the Ladera Linda Park Master Plan. As you will see, our residents have unanimously expressed their opinions as to the size and features for the proposed Park Master Plan. They want a 7,000 sq. ft. building and do NOT want this Park to be an attraction that will be advertised on Social Media to draw large crowds of outsiders.

https://www.surveymonkey.com/analyze/cRItN0OIQ9pZeTB0REuoxpmSB9TC2GBBNovJjZJYSrQk5xcIabvcg R0SpXf5uX0U

Attachment #1: This is the diagram for the 9,137 sq ft building (with 65 parking places), that the Staff presented to the City Council at their meeting on August 1, 2017, that was approved by the City Council. It includes the equivalent of 4 classrooms plus the Discovery Room. With the present usage average of 4 to 5 uses per week, this facility is way too large for it's present usage. The design of the building has numerous recesses instead of a squared off building and is not suitable for security purposes.

Attachment #2: In an effort to reduce the building cost, this option would reduce the building size to 8,000 sq ft (with 57 parking places). This option includes the equivalent of 3 classrooms plus the Discovery Room. This option is also too large for the present usage.

Attachment #3; In an effort to reduce the building cost even more, this option would further reduce the building size to approx, 7,000 sq ft (with 50 parking places). This option includes the equivalent of 3 classrooms and eliminates the Discovery Room. The Discovery Room is seldom used and can be replaced by adding glass exhibit cabinet

displays in the lobby and following the program used at PVIC. That would mean providing a storage area for wheeled carts with additional displays and teaching aids that can be wheeled into any vacant classroom when needed.

Attachment #4; This is the site plan that the Staff presented to the City Council at their meeting on August 1,2017, that was approved by the City Council. It includes an ADA access gate at the intersection of Forrestal and Pirate and basketball courts near that intersection creating noise for nearby residents. This plan also allows street parking all along Forrestal.

Attachment #5: This option recommends only one full basketball court located in the center of the property to reduce noise levels for Ladera Linda and Sea View residents. It relocates the ADA access ramp to be parallel to the main Park entrance driveway and red lines the curbs on Forrestal so there is no parking allowed on Forrestal from the gate, all the way down to the end of the Park boundary. Also there is a request that the gate be opened at dawn and closed at dusk.

The following are the 5 attachments that belong to the Survey.

LL COMMUNITY SURVEY

1. **Building Size:** The staff proposed a 9,137 sq. ft. building, to the City Council. which includes four classrooms plus The Discovery Room, and 65 parking spaces. Some residents feel that a smaller building would be more suitable for residents based on the current usage (average 5 events per week) and would be less expensive to build (tax payers expense). It may also limit the number of groups from outside RPV wanting to use the facility. Please see Attachment #1, #2 and #3 for details. The Discovery room may be deleted, but it will still have a presence. Because of its light usage it would be replaced by providing glass cabinets along the hallway walls for exhibits and when needed have carts filled with exhibits wheeled into one of the rooms just like at the Interpretive Center.

Attachment 1 http://www.llhoa.us/images/ParkLayout/BaselineFacilityLayout.pdf

Attachment 2:
http://www.llhoa.us/images/ParkLayout/BaselineFacilityLayoutLessClassroomRevA.pdf

s/ParkLayout/BaselineFacilityLayoutLessClassroomRevA.pdf

Attachment 3:
http://www.llhoa.us/images/ParkLayout/FloorPlanStudyLessDiscoveryRoomClassroomRevA.pdf

- ◯ 9,137 sq. ft., 65 parking spaces; as presented by Staff to City Council. It would include 1 Multi Purpose Room (splitable into 2 classrooms) plus 2 additional classrooms plus a Discovery Room for a total of 5 rooms. See Attachment #1.
- ◯ 8,000 sq. ft., 57 parking spaces; would delete one classroom. but include 1 Multi Purpose Room (splitable into 2 classrooms) plus The Discovery Room plus 1 additional classrooms for a total of 4 rooms. See Attachment #2.
- ◯ 7,000 sq. ft., 50 parking spaces; would delete the Discovery Room and one conference room, but would still have a Multi Purpose Room (splitable into 2 classrooms) plus 1 additional classroom for a total of 3 rooms. See Attachment #3.

Other (please specify)

2. **Basketball Courts:** The Staff has proposed to the City Council (One full size plus one half size) basketball courts, located very close to the intersection of Forrestal and Pirate. This would pose noise impacts to Ladera Linda residents in that area. See Attachment #4. Another option to consider is only having one full basketball court located in a more central location. See Attachment #5.

Attachment 4:
http://www.llhoa.us/images/ParkLayout/ParkLayoutRevA.pdf
Attachment 5:
http://www.llhoa.us/images/ParkLayout/ParkLayoutRevB.pdf

- ◯ Staff proposed to City Council one and one half basketball courts close to Forrestal and Pirate.
- ◯ Another option would be to move one full basketball court to a more central location to eliminate noise to residents near Forrestal and Pirate.

Other (please specify)

3. **Parking on Forrestal:** The staff has proposed to the City Council restricted permit parking along Forrestal, Pirate and Searaven and the use of 28 parking places beyond the gate for all users. The parking along Forrestal Drive causes additional noise and traffic when outside groups park there. Another option is to use the 28 parking places above the gate and red line all curbs from the gate down to the south end of the park property to reduce traffic and noise.

- ( ) Staff proposed to the City Council the use of 28 parking places above the gate and restricted permit parking along Forrestal, Pirate and Searaven for all users.
- ( ) An option would be the use of 28 parking places and no parking along Forrestal from the gate down to South end of park property using red line curbs to reduce traffic and noise.

Other (please specify)

[ ]

4. **Park Security:** Security is a top priority for our neighborhood. The staff has not presented any firm security measures to the City Council. An option to clearly address measures to improve security would be to install ALPR cameras at Forrestal and PVDS, security cameras throughout the Park and fencing around the perimeter with locked gates to eliminate night time activity.

- ◯ Staff did not present any firm security improvements to the City Council.
- ◯ Add ALPRS cameras at Forrestal and PVDS and security cameras in the park, along with fencing and locked gates to eliminate night time activity.

Other (please specify)

5. **Park Operating Hours:** Present park hours are Monday-Friday: Noon-5:00 PM Saturday-Sunday: 10:00 AM - 5:00 PM.

Amplified music is allowed inside the building: 10:00 am -10:00 pm and no restrictions on types of activity. An option is to limit the activities in the Park. No weddings and amplified sound not allowed after 8:00PM, and end all activities by 10:00 PM. The present gate for the 28 parking spaces will be open at sunrise and closed at sundown by either staff or a Guard Service.

- ( ) Staff made no definite changes to current hours and use to the City Council.
- ( ) Add restrictions to the activities allowed in the park. Specifically: No weddings and amplified sound not allowed after 8:00 PM. All activities to end by 10:00 PM.
  Present gate for the 28 parking spaces will open at sunrise and closed at sundown by staff or a Guard Service.

Other suggested limits or restrictions:

6. **Traffic on Forrestal and PVDS:** Staff has not addressed traffic problems at Forrestal and PVDS to the City Council. Entering and exiting Forrestal from PVDS can be challenging, especially when large groups are using the park, or AYSO soccer games as well as events taking place at the Trump Golf Course. This sometimes poses a traffic and safety hazard because it is not a controlled intersection.

- ( ) Keep current practices, which is no traffic control at PVDS.
- ( ) Make it a requirement that Park Groups of 50 or more and AYSO soccer provide traffic control person at the intersection of Forrestal and PVDS during their activity.

Other (please specify) suggestions

7. **Landscaping of Park Grounds:** Staff recommendation to City Council is to remove ALL vegetation on Park property to create an ocean view from the perimeter trails and provide a drip watering system to each plant or tree. Rough estimates are between two and four million dollars. An option would be to keep as much of our present vegetation as possible, including 2 old growth pine trees. Keep all trees along Forrestal as a sound buffer, but still install a drip system. Keep vegetation along Sea View to preserve their back yard privacy.

- ( ) Staff recommendation to the City Council is to remove ALL existing vegetation and provide all new vegetation and install a drip watering system.
- ( ) Keep as much of present vegetation as possible, including 2 old growth pine trees, and add a drip watering system to all vegetation. Keep all trees along Forrestal

Other (please specify)

8. **Total Construction Costs:** The Staff did not present any accurate construction costs to the City Council. The rough estimated construction costs for a new Ladera Linda Park have varied from $5,000,000 to over $10,000,000. This is our money that we pay to our City as taxes and fees. What dollar amount range best represents what you think the City should spend on this project?

- ◯ $4,000,000 to $5,999,999
- ◯ $6,000,000 to $7,999,999
- ◯ $8,000,000 to $9,999,999
- ◯ $10,000,000 plus

Other (please specify)

9. **Compliance With American Disabilities Act:** Staff has proposed to the City Council that the ADA (American Disabilities Act) entry be located at the intersection of Forrestal and Pirate, where the present large gate is located. Based on suggested parking improvements, a preferred location would be along side the present main Park entry driveway.

- ◯ Locate ADA gate at intersection of Forrestal and Pirate. See Attachment #4
- ◯ Locate ADA gate along side the present main Park entry driveway. See Attachment #5.

Other (please specify)

10. **<u>Left Turn Accelerating Lane At Forrestal and PVDS:</u>** Ask the City to provide a left turn accelerating lane when making a left turn at Forrestal and PVDS , heading toward San Pedro. Conqueror has such a lane and they have no problems making a left turn toward San Pedro.

- ◯ Yes, I am in favor of an accelerating lane.
- ◯ No, I am not in favor of an accelerating lane.

Other (please specify)

Ladera Linda Park Survey Results

1.0 Building Size

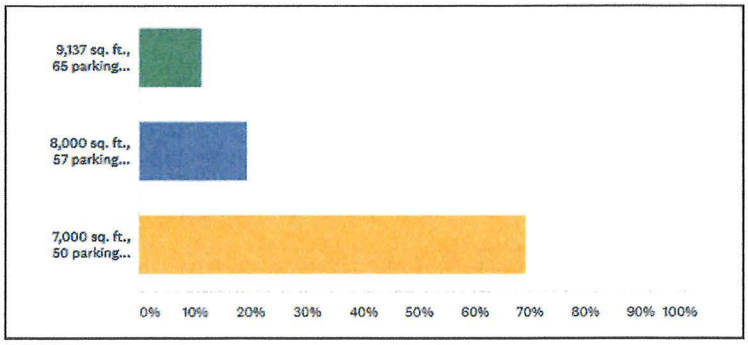

2.0 Relocate Basketball Courts

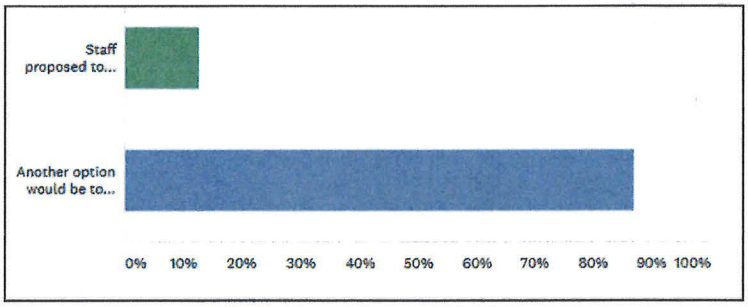

3.0 Eliminate Parking on Forrestal

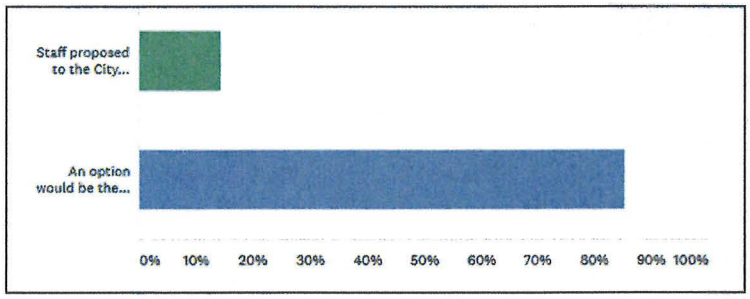

4.0 Park Security

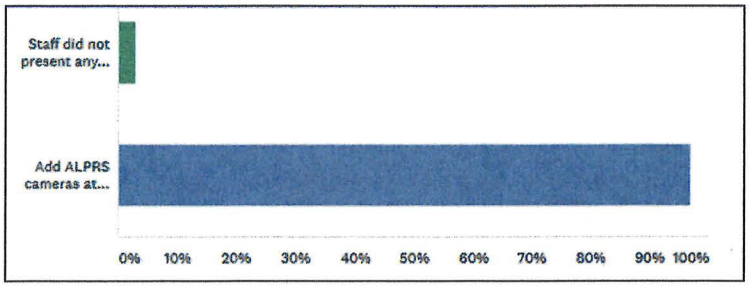

5.0 Park Operating Hours

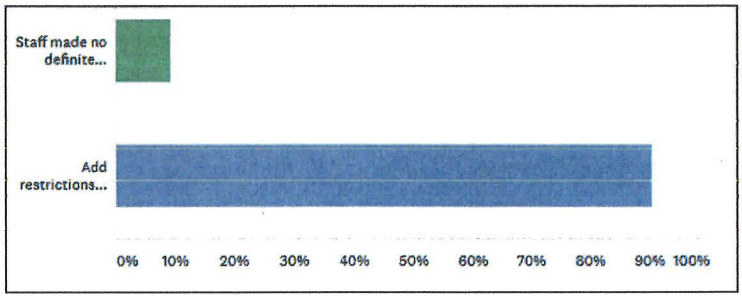

6.0 Traffic Control At The Intersection Of Forrestal and PVDS

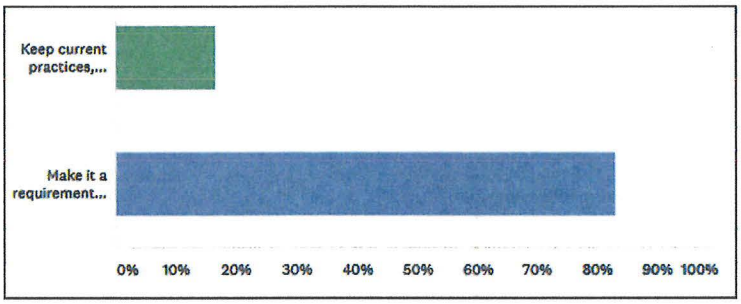

7.0 Landscaping of Park Grounds

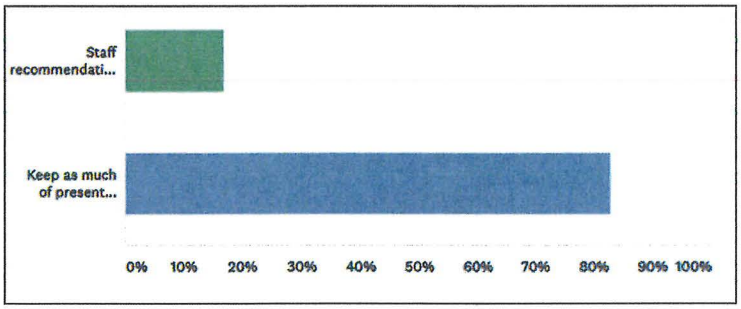

8.0 Construction Costs

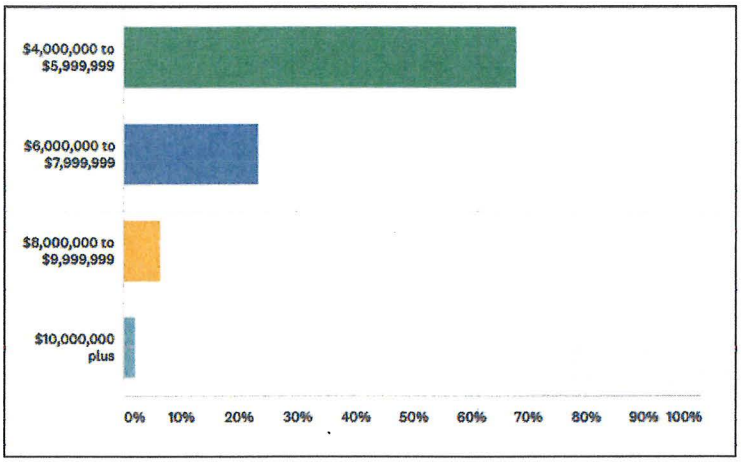

9.0 Location Of ADA Ramp

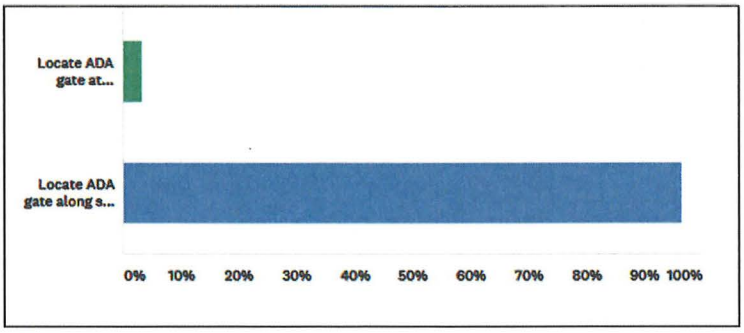

10.0 Left Turn Accelerating Lane At Forrestal and PVDS

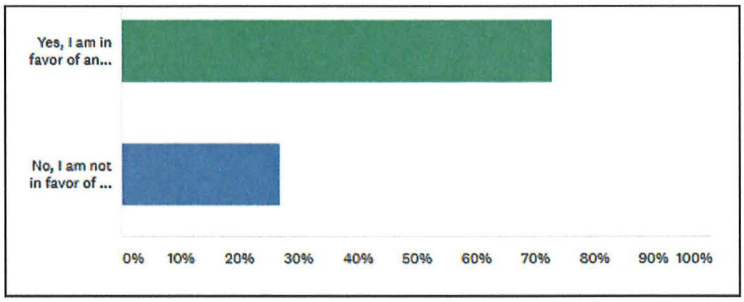

Matt Waters

From: Matt Waters
Sent: Wednesday, February 28, 2018 4:10 PM
To: Yvetta Williams; CC
Cc: Cory Linder; Matt Waters
Subject: RE: Ladera Linda redo and please keep the feeling of the discovery room.

Hi Yvetta,

Thank you for your email. Your comments in favor of maintaining the Discovery Room as part of the Ladera Linda Park Master Plan will be included in the staff report that will be presented to City Council on March 20, 2018. Please let me know if you have any additional comments or questions.

Take Care,

Matt

From: Yvetta Williams [mailto:yvetta2@gmail.com]
Sent: Friday, February 23, 2018 1:33 PM
To: CC <CC@rpvca.gov>
Subject: Ladera Linda redo and please keep the feeling of the discovery room.

PLEASE KEEP the Discovery room and PLEASE do not let the Ladera Linda residents get by with their suggestion for hallway displays and discovery carts in place of a discovery room. The displays are too fragile to be in portable carts. Adults as well as children need this information. You have a wonderful nature room now that cannot be duplicated. The room gives an overall of what is in Palos Verdes. It took years to get all the items together. It is a great place to teach about what is at Palos Verdes. A lot of time and effort was spent putting that room together and many of the items cannot be replaced or duplicated. To some people nature is NOT important and to others it is ALL important. PLEASE fight for it and know you will NEVER get another room with everything together like that room. The butterfly collection is 80 years old and was collected when I was a child and with the help of a neighbor who was a science teacher myself and my mother, they were ID's and got mounted. The butterfly garden is very special and Leslie Williamson is wonderful. Don't throw her away either.

Where would you get another bear skin? It was bought Many years ago and it is in the room because there were bears all over this area. Children and adults are really surprised at that. You read about bears going in swimming pools in Pasadena nearer the mountains. There were bears all over our area before they were all killed. There is a collection of all the abalone shell varieties that are in S. Calif and things in our tidal pools and how sea shells grow. It takes years for a shell to get big enough to see. The shells were left over from our store when I retired, and are hard to find and some cannot be sold as they are on the endangered specie list. The display tells about the peacocks, peahens and peachicks and eggs and how they got to Palos Verdes. There is a display on the native plants. Hands on rocks and minerals. Humming birds, raptors, endangered specie birds, ground squirrels, fox, raccoons, owls, skunks, possums, None of the schools or the parks have this information. You have something special Please do not let it get away.

The reptiles, insects, spiders of our area are on display, We need to teach which are safe and that ALL are our friends and how to act around them and why we shouldn't kill them. To have wonderful pictures of birds taken by Steve Wolfe and to find the real bird nest matching the bird is special. Steve has moved out of the area.

The artifacts of the indigenous people found in the area are special. Palos Verdes had many different Indio communities and the people went by the name of the community where they lived. Abalone Cove and Point Vicente were called Haraasnga. San Nicolas Island was also called Haraasnga and people lived in both places and boated between them. Haraasnga meant things that stand up. (Rocks by Terranea) similar looking rocks at San Nicolas Island. The community at White Point was called Tovemungna, the place of the rabbit. They boated to Catalina Island which was called Pimunga. Soapstone was mined in Catalina and traded for items the Pimu needed there. The store room that PVIC is using at Ladera Linda has priceless things from the Indio communities. One well known community was at Malaga cove area was Chowingna. Suangna (Place of the reeds now known as Machado Park is where they got their tules and there is wonderful history. They could boat from the marsh all the way to the ocean.

The Historical Society has a wonderful collection of artifacts that were at Malaga Cove school. There should be a room set aside for that exceptional collection. Where there were fresh water springs there were communities. Many of those same springs are still running today. Increase the size of the building to include the history of the early people who lived here before the European explorers. That would be wonderful!!!

In the discovery room there is a small collection of real artifacts from the area and displays telling what the native people used for food and about their trade. We actually need another room just for displays on this area before the Europeans arrived and before they changed everything. People lived here for 7-10,000 years and had all they needed to survive. They had an extensive trade route and took care of their needs. This hasn't been taught in the schools and we could do it with displays at Ladera Linda. We also have displays of local fossils and rocks and minerals. It would be very difficult to get all the items in the discovery room together again. Please treasure it. Please don't be so short sighted that you destroy what you already have and which is not available anywhere else in the area. Please treasure it. I would be very happy to give the council a tour of the discovery room and share with you the treasures of our area.

Thank you,
Yvetta Williams

Matt Waters

From: Matt Waters
Sent: Wednesday, February 28, 2018 4:20 PM
To: BW Riedman; Cory Linder; Daniel Trautner
Cc: CC; Cory Linder; Matt Waters
Subject: RE: Ladera Linda Community Center

Hi Betty,

Thank you for your email and for attending last week's Ladera Linda Park Master Plan workshop. I personally appreciate the great showing of residents at the workshop and the wide range of opinions and ideas. Your general comments about the plan and your support for maintaining the Discovery Room will certainly be considered by staff and the consultant and will be included in the staff report that will be presented to the City Council on March 20th.

Take Care,

Matt

From: BW Riedman [mailto:rabbit943@gmail.com]
Sent: Thursday, February 22, 2018 3:53 PM
To: Matt Waters <MattW@rpvca.gov>; Cory Linder <CoryL@rpvca.gov>; Daniel Trautner <DanielT@rpvca.gov>
Cc: CC <CC@rpvca.gov>
Subject: Ladera Linda Community Center

Hi

I just want you to know that I thought the presentation of the proposed plans for the Ladera Linda Community Center were very well presented. Y'all have worked very hard to try and fit in everything wanted and not wanted and I think this plan is a good one. Not too big but large enough to accommodate small groups and events.

As you well know, you cannot please everyone. My take on last night is that the Ladera Linda residents cannot separate the problems with the hikers/bikers and AYSO from the community center which has NEVER been a big draw. And the people who do use it are generally residents. I am truly getting tired of the NIMBY attitude that I see more and more in RPV. If you want to keep the riffraff out, make this a gated community like Rolling Hills. You say it's for the public but which public? Only the residents that live within so many feet of it?

It seemed to me that the biggest objection, over and over, was the traffic and parking. And I would venture a guess that 99% of the traffic issues have nothing to do with the community center. And when are all the so-called "traffic/parking" issues? I would probably be safe in assuming on the weekends when there are AYSO games and people hiking - very few of which probably don't even bother with the center (other than to use the bathroom). The traffic situation at the intersection of PVDrive South and Forrestal is another issue entirely and shouldn't even be in this discussion. Yes, there is an problem at that intersection. The fix is easy - put in a traffic light with sensors that would favor PVDrive South. BUT! I would bet the folks living on those corners would howl about that! They don't want the noise of cars stopping and starting or exhaust. OK - put a timer on the light so it's only active from 7 am to 10 am and from 4 pm to 6 pm (or whenever there is rush hour traffic).

The Ladera Linda Community Center is the only community center on this side of The Hill. And for people to object to non-RPV families using it is mean and petty and selfish. You cannot tell me that the people that enjoy Hesse Park only live in RPV.

Forrestal Nature Reserve is very special. The trails are not that difficult and the vista views are beyond belief. The residents do not want to share these. I'm sorry, that's not right. And the City cannot be blamed for the so-called "social media" exposure.

On to the Community Center itself -- Herb's comments re the Discovery Room are specious at most. For one thing, I think the Discovery Room is a well kept secret. Last night I had two residents tell me that they didn't even know it existed until they were at Ladera Linda for the Parks event. They and their children were blown away by the photos and history it represents. Ladera Linda has been rather neglected by the City. No full time staff (which you say will be corrected) and about the only thing the City has supported has been the school and organization hikes that are provided by the docents. The Discovery Room was created to not only preserve items related to RPV and the area but to share them with the children. Perhaps with a full time staff member on-site, the room can be opened full-time to the public and maybe even a docent assigned on a daily basis to answer questions, etc.

I hope you have personally gone to check out the Discovery Room and to actually see what it has to offer. It's very special and a lot of effort was put into it to make it as wonderful, informative and educational as it is.

I know this is rather long but I do hope you will keep the community center as it is now planned. I would venture to assume that all the same objections will be presented over and over again by the same people every time you have a community outreach meeting.

Thank you.

Betty Riedman

Matt Waters

From: BW Riedman <rabbit943@gmail.com>
Sent: Wednesday, February 28, 2018 4:31 PM
To: Matt Waters
Subject: Re: Ladera Linda Community Center

Thanks, Matt.

Wish I could be at the CC meeting. I still strongly feel that the residents' concerns really have nothing to do with the Community Center per se. It's the current influx hikers and bikers that are the issue (and that is not going to change) and they will not be using the community center. And their concerns about making it a "view" park are unfounded. It's not like driving down PVDrive South and seeing the sunset and stopping to take it in. AND! Even if people did come to the park just to see the sunset, after the sun is gone, it's dark. Now what? Is the City going to have barbecue pits? Are they afraid that they will stay and do wild and crazy things? Sigh!

Oh well. I'm just one little voice. And the "Less is More" approach (which leads to the NIMBY attitude) sounds good but it is only benefiting the residents in the immediate vicinity.

Betty

On Wed, Feb 28, 2018 at 4:19 PM, Matt Waters <MattW@rpvca.gov> wrote:

Hi Betty,

Thank you for your email and for attending last week's Ladera Linda Park Master Plan workshop. I personally appreciate the great showing of residents at the workshop and the wide range of opinions and ideas. Your general comments about the plan and your support for maintaining the Discovery Room will certainly be considered by staff and the consultant and will be included in the staff report that will be presented to the City Council on March 20th.

Take Care,

Matt

From: BW Riedman [mailto:rabbit943@gmail.com]
Sent: Thursday, February 22, 2018 3:53 PM
To: Matt Waters <MattW@rpvca.gov>; Cory Linder <CoryL@rpvca.gov>; Daniel Trautner <DanielT@rpvca.gov>
Cc: CC <CC@rpvca.gov>
Subject: Ladera Linda Community Center

Hi

I just want you to know that I thought the presentation of the proposed plans for the Ladera Linda Community Center were very well presented. Y'all have worked very hard to try and fit in everything wanted and not wanted and I think this plan is a good one. Not too big but large enough to accommodate small groups and events.

As you well know, you cannot please everyone. My take on last night is that the Ladera Linda residents cannot separate the problems with the hikers/bikers and AYSO from the community center which has NEVER been a big draw. And the people who do use it are generally residents. I am truly getting tired of the NIMBY attitude that I see more and more in RPV. If you want to keep the riffraff out, make this a gated community like Rolling Hills. You say it's for the public but which public? Only the residents that live within so many feet of it?

It seemed to me that the biggest objection, over and over, was the traffic and parking. And I would venture a guess that 99% of the traffic issues have nothing to do with the community center. And when are all the so-called "traffic/parking" issues? I would probably be safe in assuming on the weekends when there are AYSO games and people hiking - very few of which probably don't even bother with the center (other than to use the bathroom). The traffic situation at the intersection of PVDrive South and Forrestal is another issue entirely and shouldn't even be in this discussion. Yes, there is an problem at that intersection. The fix is easy - put in a traffic light with sensors that would favor PVDrive South. BUT! I would bet the folks living on those corners would howl about that! They don't want the noise of cars stopping and starting or exhaust. OK - put a timer on the light so it's only active from 7 am to 10 am and from 4 pm to 6 pm (or whenever there is rush hour traffic).

The Ladera Linda Community Center is the only community center on this side of The Hill. And for people to object to non-RPV families using it is mean and petty and selfish. You cannot tell me that the people that enjoy Hesse Park only live in RPV.

Forrestal Nature Reserve is very special. The trails are not that difficult and the vista views are beyond belief. The residents do not want to share these. I'm sorry, that's not right. And the City cannot be blamed for the so-called "social media" exposure.

On to the Community Center itself -- Herb's comments re the Discovery Room are specious at most. For one thing, I think the Discovery Room is a well kept secret. Last night I had two residents tell me that they didn't even know it existed until they were at Ladera Linda for the Parks event. They and their children were blown away by the photos and history it represents. Ladera Linda has been rather neglected by the City. No full time staff (which you say will be corrected) and about the only thing the City has supported has been the school and organization hikes that are provided by the docents. The Discovery Room was created to not only preserve items related to RPV and the area but to share them with the children. Perhaps with a full time staff member

on-site, the room can be opened full-time to the public and maybe even a docent assigned on a daily basis to answer questions, etc.

I hope you have personally gone to check out the Discovery Room and to actually see what it has to offer. It's very special and a lot of effort was put into it to make it as wonderful, informative and educational as it is.

I know this is rather long but I do hope you will keep the community center as it is now planned. I would venture to assume that all the same objections will be presented over and over again by the same people every time you have a community outreach meeting.

Thank you.

Betty Riedman

Matt Waters

From: Matt Waters
Sent: Thursday, March 08, 2018 3:08 PM
To: Walter Goede
Cc: Cory Linder; Matt Waters
Subject: RE: Comments on Ladera Linda

Dear Mr. Goede,

Thank you for your email and for attending the workshop. Your support of the proposed design and your comments about maintaining the proposed elements and the building's square footage will be considered by Staff and included in the March 20th City Council Staff Report.

Sincerely,

Matt Waters
Senior Administrative Analyst

City of Rancho Palos Verdes
Recreation and Parks Department
30940 Hawthorne Blvd.
Rancho Palos Verdes, CA 90275
www.palosverdes.com/rpv
mattw@rpvca.gov - (310) 544-5218 p – (310) 544-5291 f

-----Original Message-----
From: Walter Goede [mailto:waltgoede@gmail.com]
Sent: Thursday, March 01, 2018 2:32 PM
To: Matt Waters <MattW@rpvca.gov>
Subject: Comments on Ladera Linda

I attended the presentations on Feb 21 and found them very interesting and informative. I fully support the plans as presented.

I was very disturbed by many of the comments made by the local residents. It seems as if they would be happiest if RPV but up a 10 foot wall around their area with a guarded gate so only those people who lived next to the park could use it. This is a city resource and needs to be planned with the city best interests in mind while also trying to make sure the local area isn't negatively impacted. I thought a great compromise was reached in the plan as presented. I have lived in the Mediterranean area for over 40 years and have used the Ladera Linda area frequently.

Although we no longer have young children. we still believe the duty of the city is to plan great facilities for the kids of the area as well as providing a place for adult education. It seems that many of the "local" residents are at an age

(similar to ours 70+) where they have forgotten the joy of hearing kids play. RPV is a family community and if they no longer want to live in a family community they need to move to a seniors retirement community.

Please do not give in to their never ending whining to: reduce the building size, move the basketball and kids parks, reduce number of parking stalls, do away with the learning center, etc. Do what is right for the kids and the RPV community. I wish we had such a facility closer to our house.

Thanks & keep up the good work

Walter Goede
31051 Hawksmoor Dr
RPV
310-377-0897

Matt Waters

From: Matt Waters
Sent: Thursday, March 08, 2018 3:14 PM
To: Mickey Rodich <mickeyrodich@gmail.com>
Cc: Cory Linder; Matt Waters
Subject: RE: Ladera Linda Park Master Plan Workshop Comments

Hi Mickey,

Thank you for your email about the Ladera Linda Park Master Plan. The proposed plan that will be presented to the City Council on March 20th is the result of extensive public outreach. I appreciate your comments, and your continued involvement and passionate concern for this project. The ideas and concerns in your email will be included as part of the Staff Report the will be considered by the City Council. Thanks again and I hope to see you at the meeting.

Sincerely,

Matt Waters
Senior Administrative Analyst

City of Rancho Palos Verdes
Recreation and Parks Department
30940 Hawthorne Blvd.
Rancho Palos Verdes, CA 90275
www.palosverdes.com/rpv
mattw@rpvca.gov - **(310) 544-5218 p** – (310) 544-5291 f

Parks Make Life Better!

From: Mickey Rodich [mailto:mickeyrodich@gmail.com]
Sent: Wednesday, February 28, 2018 4:35 PM
To: Matt Waters <MattW@rpvca.gov>
Cc: CC <CC@rpvca.gov>
Subject: Ladera Linda Park Master Plan Workshop Comments

I was unable to attend the Workshop on Feb. 212018, but I was able to discuss the Workshop with some neighbors that attended the meeting and I also was able to review your online presentation. Even though I was not able to hear your verbal presentation, I think I got a good idea of what transpired.

During the City Council meeting on Nov. 18,2016, that you referred to in your presentation, the City Council instructed your department to adhere to the City Council's "Less is More" guidance approach along with incorporating the immediate residents idea's and concerns in the design of the new Park. That Agenda Report also stated "The recommendations on what to include (and what not to include) were strongly influenced by resident feedback received via survey, emails and Workshops". That statement was true only for the initial Workshops, held prior to this meeting with the discussions centered on swimming pools, gymnasiums, skate board park and a dog park, which were rejected by the City Council and they then provided you with new guidance to listen to the desires of the residents.. At that point, after many resident comments, Staff

recommended a 9,000 sq ft building. During the first Workshop meeting it was the architect that suggested that there was a possibility of adding up to 40 parking places on Forrestal, but we were told that that was not in the scope of this project. However later, for some reason, 28 parking places and an upper gate became part of this project.

Prior to the City Council meeting on August 1.2017, you held additional private meetings with residents and users to further define what amenities to include in the new Park building. I attended one of these meetings and reaffirmed the concerns expressed by our residents during their meetings such as: total cost, security cameras, do not make another Del Cerro Park fiasco, 7,000 sq ft building to meet community needs, relocation of noise generating basketball and children's play area, relocate ADA access, provide traffic control and left turn accelerating lane at Forrestal and PVDS, and retain existing landscape as much as possible. At this City Council meeting you made another presentation on the Ladera Linda Park planned design concept. Again the City Council told you to work with the residents to determine the amenities for the new Park building. One of the biggest issues was the size of the building. The nearby residences preferred a 7,000 sq ft building, based on the average usage of 4 to 5 per week along with a much lower parking place requirement. We at Ladera Linda HOA recently conducted a survey to reach a consensus as to the preferred features for the new Park and the over 80 responses were overwhelmingly in agreement on the amenities as detailed in my correspondence to you prior to this last meeting.

Reviewing what transpired during the meeting made one thing perfectly clear: The plan that you originally proposed 2 years ago has not changed at all. You have not listened to our residents for our input. Your minds were already made up from the beginning. Your answer to our suggestion to provide traffic control and a left turn accelerating lane at Forrestal and PVDS was that it is not in the scope of this project, however it is a very critical part of this project and should be considered as part of it. This new park will create traffic problems at PVDS.

After reviewing the artist renderings I see that the "Less is More" mantra imposed by the City Council does not apply to this project:

1) On your Floor Plan (page 20), you still show 5 meeting/classrooms. The usage does not justify 5 meeting/classrooms. We only need 3 meeting/classrooms. Also we do not need a Discovery Room. The usage does not justify a Discovery Room. It can operate just like it does at PVIC.

2) The multipurpose room is chopped off at a sharp angle and has a 261 sq ft staging area, in the middle of the gallery and not connected to outside access. There is no minimal kitchen area shown in your plans either.

3) One would think that the Storage areas shown (240 and 295 sq ft) would be connected to each large room instead of being on the opposite side of the gallery. Maybe you are planning to use them as future offices?

4) On pages 24 and 25 you show a dry river bed with a bridge. We are not duplicating a downtown Music Center. I see this feature as being a liability and not an asset. With all of the architectural (high) concrete steps, river rock, depressions and a bridge, I see a large liability factor for injuries.

Seniors and small children will have difficulty navigating this area. The daily gardening maintenance costs will be very high. Whats wrong with a grass lawn and gentle slopes? This area could even someday become our skate park. Eliminating all of these unnecessary features could more than pay for relocating the ADA access to be next to the entry driveway.

5) The Lobby desk should be located so that Staff has unobstructed views of the galleries and likewise the outside perimeter should not be full of nooks and crannies for security reasons.

6) The entry court is way too large. You are talking about the Sheriff having line of site access, but this leaves blind spots.

I am against P3 financing for this project. The 18% to 20% interest rates are a detriment. The total cost for financing will be far more than double the initial
cost of the project. The same question arose when the San Ramon Canyon project was to be financed. What's wrong with traditional debt financing or If the City has the funds, as there is in this case, then there is no need for any kind of financing?

I think there is still time to make this project acceptable to us residents. But again, up till now, nothing was changed as a result of resident input. After all of the meetings and Workshops, your initial proposal still stands; nothing has changed to include resident input. Again, no one has paid attention to the residents.

Matt Waters

From: Matt Waters
Sent: Thursday, March 08, 2018 3:24 PM
To: Herb Stark
Cc: Cory Linder; Matt Waters
Subject: RE: Ladera Linda Park

Hi Herb,

Thank you for your email and for your ongoing involvement in this important community project. The issues you've raised in your email (and at the workshop) regarding square footage, parking, traffic, basketball court/bldg. relocation, security, park usage, traffic control, etc... will all be included in the report presented to Council on March 20th. The amount of resident interest and passion for this project has been tremendous, and I wholeheartedly believe that the final result will be a source of tremendous pride for the community. Thanks again, Herb, and I look forward to seeing you at the CC meeting.

Matt

From: Herb Stark [mailto:pt17stearman@gmail.com]
Sent: Tuesday, February 27, 2018 8:21 AM
To: CC <CC@rpvca.gov>
Cc: Matt Waters <MattW@rpvca.gov>
Subject: Ladera Linda Park

On August 1st 2017 the Parks and Recreation staff presented to the City Council the planned conceptual design for the renovation and upgrading of the Ladera Linda Park. At that time concerned residents from the local community expressed their concerns. As a result staff was directed to go back to resolve these outstanding issues before proceeding.

The objective of the February 21st workshop was to present to the community the results of studies to mitigate the concerns of the residents before going to the City Council for approval of the proposed development. Unfortunately what was presented did not resolve the resident's issues.

The major concern of the local residents is the fear that Ladera Linda would become another Del Cerro disaster. The community is already suffering from the affects from AYSO, large unscheduled and non-regulated trailhead parking and traffic issues. The community feels that depending on how the park is developed could exasperate the problem.

Ladera Linda is unique in that there is only one entrance to the park, trailhead and the residential area with limited parking.

The community is also concerned with the rising crime rate in the area and as the popularity of the new park and trailhead becomes known, through mulita media, the problem will become worse. Even under the present circumstance the residents are considering obtaining an outside security service.

Here again the Ladera Linda community is unique in that it is located near the high crime community of San Pedro in the city of Los Angeles with the potential of crime spilling over into the community.

As a result the residents asked that the city staff address the following issues:

1. Building Size to meet community needs only
2. Relocate the children's area and basketball courts to reduce noise to the residents along Forrestal
3. Eliminate parking along Forrestal and relocate the ADA ramp on Forrestal
4. Increase park and residential security by adding ALPRS cameras on Forrestal
5. Limit park hours and use
6. Provide Traffic control during events and a left turn acceleration lane at the intersection of Forrestal and PV Drive South
7. Maintain the park landscape as much as possible to provide view protection of the residents along Forrestal and the Seaview residential homes

What was presented at the workshop was the same layout that was rejected by the community at the August 1st 2017 City Council meeting. Staff's position is that the traffic and parking issues are driven by the reserve and AYSO and not the park. The residents' position is that the redevelop park could become an attractive nuisance if not developed properly adding to the problem. Staff agreed to restrict the parking along Forrestal but that relocating the ADA ramp would be too costly. Staff suggested that maybe the City should pay for AYSO traffic control.

They totally rejected reducing the size of the building, increasing the size of the Discovery Room and adding a patio. The Discovery Room is seldom used nor manned and when used it supports the Los Serenos Outreach Program for Title I children from outside the community. In fact at the workshop one of the docents stated that there was no other place to store valuable artifacts. At $400 per sq. ft., or $408,000, this becomes a very expensive storage facility. The elimination of the small classroom will also save an additional $317,000. This savings should be more than enough to offset the cost of relocating the ADA ramp. Further, the docents have never been able to staff the Discovery Room, since it was established, and if retained the docents should be required to provide a docent on site during operating hours.

To put salt in the wound, the one thing the community wanted was a large conference room to hold association meetings and events. What staff proposed was a slightly smaller room than presently exists and a shape that make it inefficient to use. It seemed that the staff was more interested in the esthetics of the building than providing a functional layout.

When the issue of security came up there was no discussion of adding ALPRS cameras but to cut the hedges down along Forrestal so the Sheriff can drive along Forrestal and look into the park. This raised a privacy issue with the residents that live along Forrestal. Right now the present hedge height prevents park visitors from looking into their backyards and bedroom windows.

On the other side of the park staff proposes to replace the present hedges with hedges that will allow visitors an ocean view. This presents a problem with the Seaview residents as it would allow visitors to look down into their backyards. Staff indicated that the new hedges would be wide enough to prevent that. If this is the plan it needs to be stipulated in any landscaping agreement. Unfortunately, ocean views attract visitors.

Parks staff readily admits in their proposal for the park there will be "some increase in usage" of the new facilities. Obviously the residents are all worried it could be significantly higher than they anticipate unless the facility is scaled back and opening up panoramic views are eliminated.

Adding to this the City's ill-conceived plan of adding traffic calming bicycle lanes along PV Drive South could very well make Ladera Linda Park a trailhead for bicycle clubs.

The bottom line is our desire NOT to have the new Ladera Linda Park become a destination attraction that will be advertised on Social Media and draw large crowds from outside our City with the related traffic congestion such as the Del Cerro Park disaster. This Park should be designed to satisfy the needs of our local residents. It also seems prudent to resolve the current traffic and parking issues before updating the park.

The residents are very concerned about crime, noise, parking, traffic congestion and they do not want the new facility to become a **trail-head information center for the reserve or bicycle clubs**. Our Survey of residents showed that the vast majority favor a low profile Park.

Herb Stark
Rancho Palos Verdes

Matt Waters

From: Matt Waters
Sent: Thursday, March 08, 2018 3:34 PM
To: Robert Nelson <nelsongang@aol.com>
Cc: Cory Linder; Matt Waters
Subject: RE: Comment, Questions re Ladera Linda Parks Master Plan

Hi Bob,

I apologize for the delay in responding to your email. Thank you for your thoughtful email about the financial implications and potential funding mechanisms for this project. While the Feb. 21 had some overview information about potential alternatives, the March 20th Staff Report to the City Council on will go into more detail. The public absolutely has the right to voice their opinion about the project in general and about the financing (and potential interest implications) aspects. The issues in your email will be part of the March 20 Staff report.

Sincerely,

Matt Waters
Senior Administrative Analyst

City of Rancho Palos Verdes
Recreation and Parks Department
30940 Hawthorne Blvd.
Rancho Palos Verdes, CA 90275
www.palosverdes.com/rpv
mattw@rpvca.gov - **(310) 544-5218 p** – (310) 544-5291 f

Parks Make Life Better!

From: Nelsongang [mailto:nelsongang@aol.com]
Sent: Saturday, February 24, 2018 4:00 PM
To: Matt Waters <MattW@rpvca.gov>
Subject: Comment, Questions re Ladera Linda Parks Master Plan

Matt,

This is written as a private citizen.

Though we were unable to attend your Feb 21 Master Plan presentation I did go through your Power Point and have the following comments and questions:

1. It is obvious you have put a great deal of thought, analysis and plan expertise into your Feb 21, 2018 presentation. As you recognize, until Council firms up any construction bid to include what they want and, therefore, will approve, the number is fluid. And, as those of us who have spent any time in planning, costing and scheduling know, whatever you have planned - will then change and continue to change throughout construction.

2. You note a guess at Ladera Linda costing $7 million.

Question: does that include interest over 30 years repayment? Usually your constructions costs can be doubled to find the real 'consumer' cost of a project. As with your mortgage, amount financed plus interest will be actual cost. RPV citizens will pay that number for Ladera Linda. That's $14 million, not $7 million. It's a 'cost to consumer' calculation. We do 'consumer cost' with staff salaries by showing RPV citizens their city's actual budgeted staff pay includes benefits the staff member never sees but for which we pay.

3. Question:
Can RPV voters assume they will have a say in approving any incurred debt and total debt repayments for our Council approved amount, lets say $14 million including construction + interest, be it P3 or any other debt form? We were founded as a 'low tax' city and are facing nearly a hundred million dollar debt figure to accomplish our Council's Ladera Linda, City Hall and Landslide projects. That's a heavy RPV citizen tax burden on top of things like RPV's unfunded pensions liability. Many hope our Council will give their citizens a say in whether their city should assume these debts, even if only shown in their RPV budget, that is, financed using a technique not requiring citizen vote. Again, we are a low tax city.

And again, in accord with our RPV Rules and Procedures, written as a private citizen.

Bob Nelson