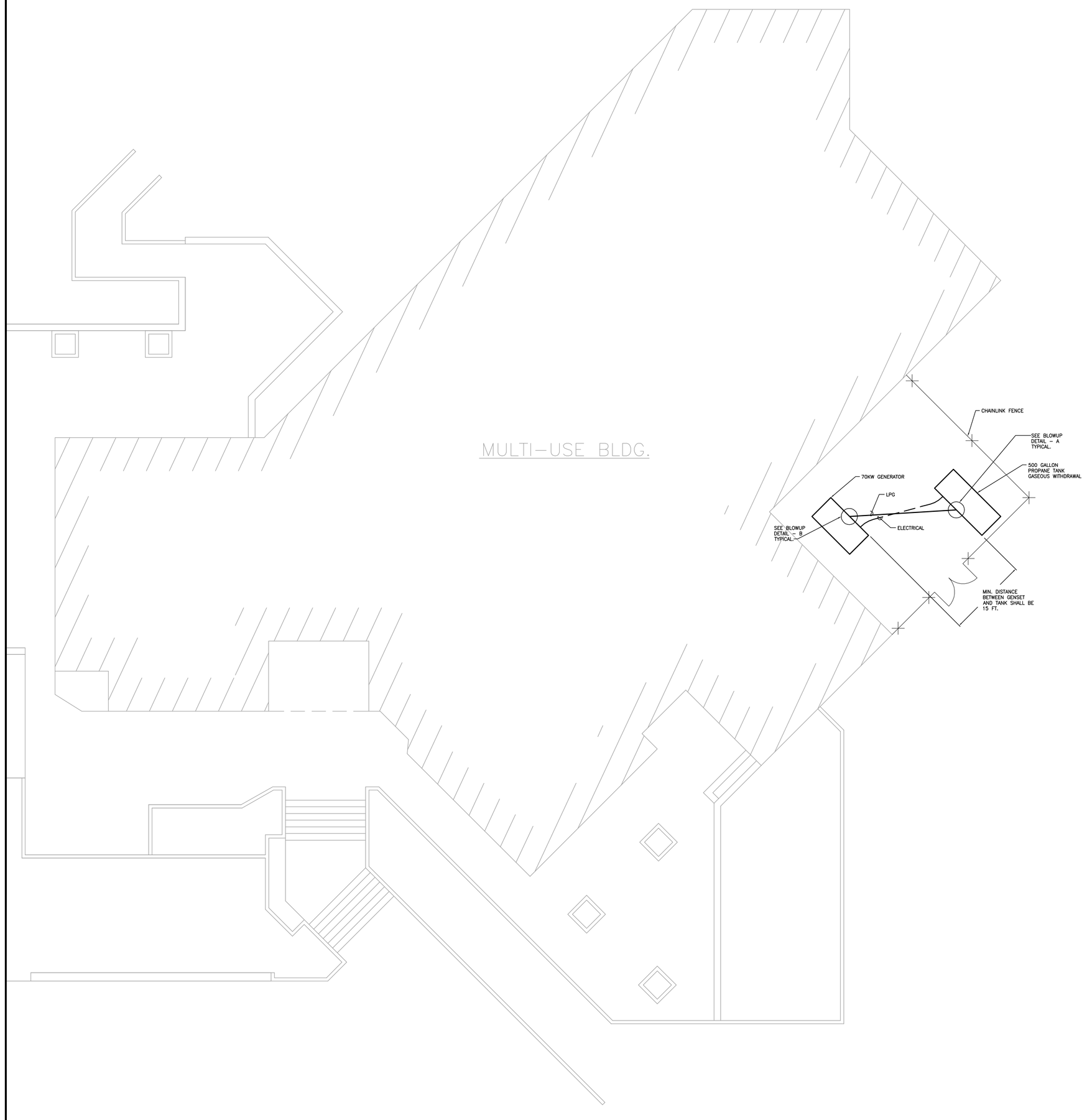

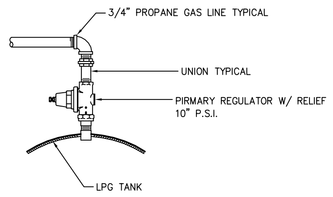

DETAIL - A

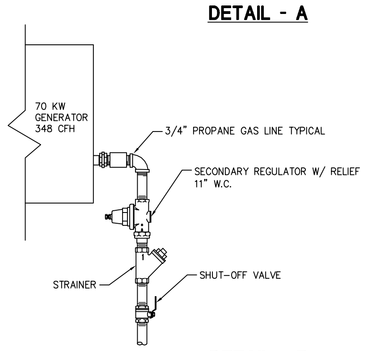

DETAIL - B

PLUMBING LEGEND		
SYMBOL	ABB	DESCRIPTION
—LPG—	LPG	LIQUIFIED PETROLEUM GAS (PROPANE)
—⋈—	SOV	SHUT-OFF VALVE (PROPANE LIQUID SERVICE VALVE)
—⊖—	DN	DOWN
—○—	UP	RISER
—⊕—		UNION
—◆—	POC	POINT OF CONNECTION
—ø—	RV	RELIEF VALVE
	TYP	TYPICAL
	W/	WITH
	BEL	BELOW
	ABV	ABOVE
	FLR	FLOOR
	U.G.	UNDER GROUND
	A.F.F.	ABOVE FINISHED FLOOR
	CONT.	CONTINUATION
—⊻—		STRAINER

TANK SHALL BE EQUIPPED WITH ALL REQUIRED DEVICES PER NFP 5.7.7.1. ALL NECESSARY FILLER VALVES, GAUGES, RELIEF VALVES AND EXCESS FLOW VALVES.

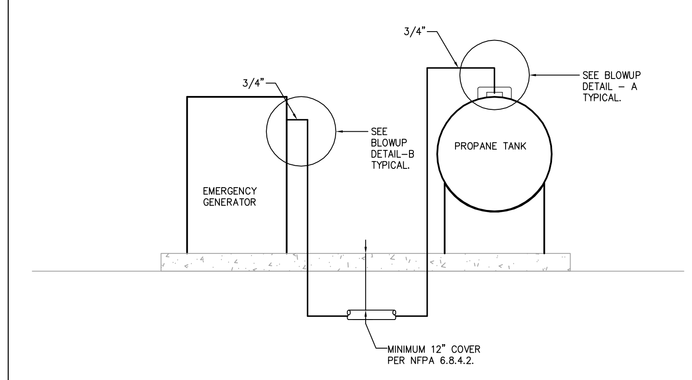

SECTION 232116

PIPE AND PIPE FITTINGS

PART 1 – GENERAL

1.1 DESCRIPTION: THE WORK INCLUDES BUT IS NOT LIMITED TO, PIPE AND PIPE FITTINGS, COMPLETE.

1.2 QUALITY ASSURANCE:

A. CODES AND STANDAROS: COMPLY WITH APPLICABLE CODES AS LISTED IN SECTION 01011 OF THE SPECIFICATIONS AND FOLLOWING STANDARDS:
1. ASTM – APPLICABLE STANDARDS.
2. ASME – APPLICABLE STANDARDS.
3. CISPI – APPLICABLE STANDARDS.
4. ANSI – APPLICABLE STANDARDS.
5. NCPI – APPLICABLE STANDARDS.
6. MANUFACTURER'S INSTALLATION STANDARDS.
7. NFPA 58.
8. CALIFORNIA TITLE 8.

1.3 SUBMITTALS:

A. SUBMITTALS REQUIRED FOR EACH MATERIAL.

1.4 PRODUCT DELIVERY, STORAGE AND HANDLING:

A. DELIVERY OF MATERIAL:
1. PIPING SHALL BE BANDED, BEARING INTACT GRADE SEALS.
2. ALL CONTAINERS SHALL BE DRY AND CLEAN.
3. OPEN ENDS SHALL BE SEALED.

B. STORAGE OF MATERIAL:
1. MATERIAL SHALL BE PROTECTED FROM THE WEATHER AND DAMAGE.
2. STORE IN LOCATION TO MINIMIZE HANDLING.

1.5 JOB CONDITIONS:

A. PROTECTION: MATERIALS SET IN PLACE SHALL BE PROTECTED TO PRECLUDE DAMAGE.

PART 2 – PRODUCTS

2.1 ACCEPTABLE MANUFACTURERS:

A. MANUFACTURER: SUBJECT TO COMPLIANCE WITH REQUIREMENTS, PROVIDE PRODUCTS OF ONE OF THE FOLLOWING:
1. POLYETHYLENE GAS PIPE & FITTINGS: J.M.M. OR EQUAL.
2. STEEL PIPE: U.S. STEEL, WHEATLAND, OR EQUAL.
3. MALLEABLE IRON FITTINGS: WALWORTH, GRINNELL, OR EQUAL.

2.2 REQUIREMENTS:

A. PRODUCTS: ALL ITEMS LISTED ABOVE SHALL BE FROM A SINGLE MANUFACTURER, WHERE APPLICABLE.

2.3 BLACK STEEL, POLYETHYLENE PIPING AND FITTINGS (ABOVE & BELOW GROUND):

A. SEAMLESS SCHEDULE 80, SEAMLESS ASTM A106 PIPE.
1. FITTINGS: 400 LB. SWP, MALLEABLE IRON, SCHEDULE 80.
A. THREADED, MALLEABLE IRON.
2. APPLICATION:
A. FUEL LINES.

B. POLYETHYLENE PIPE ASTM D3350, PE3408 OR PE2406.

2.4 PIPING PROTECTION:

A. FACTORY COATED AND WRAPPED STEEL PIPES.
1. ONE COAT OF ASPHALT PRIMERS.
2. TWO COATS OF HOT ASPHALT.
3. ONE LAYER OF 15 POUND SATURATED FELT.
4. ONE COAT OF HOT ASPHALT.
5. ONE LAYER OF KRAFT PAPER.
6. CLEAN AND WRAP FIELD JOINTS AND FITTINGS WITH TWO SEPARATE WRAPPINGS.

B. ALTERNET FACTORY COATING: SCOTCKOTE FUSION BONDED EPOXY COATING.

C. FIELD WRAPPINGS: SAME AS FACTORY WRAP.

D. PROVIDE ANODE PROTECTION FOR METAL PIPE IN ACCORDANCE WITH NFPA 58.

E. APPLICATION: ALL METAL FUEL PIPING AND FITTINGS BELOW GRADE.

2.5 FITTINGS:

A. UNIONS:
1. STEEL PIPE: MALLEABLE IRON, 400 PSI.

B. NIPPLES SHALL CONFORM TO REQUIREMENTS OF U.S. DEPARTMENT OF COMMERCE STANDARD CS–5 "PIPE NIPPLES; BRASS, COPPER, STEEL AND ALLOY". USE NIPPLES FROM PACKAGES WHICH BEAR MANUFACTURER'S LABELS OR TAG READING "GUARANTEED PIPE NIPPLES CONFORMING TO CS–5 MADE FROM NEW PIPE" OR OTHER WORDS TO THIS EFFECT. MAKE NIPPLES OF SAME MATERIALS AND WEIGHT AS PIPE WHERE ON USED. DO NOT USE CLOSE NIPPLES.

C. JOINT COMPOUND: EVERSEAL 183 OR EQUAL.

2.6 VALVES AND STRAINER:

A. PRESSURE CONTAINING PARTS OF VALVES SHALL BE OF STEEL OR MALLEABLE IRON.

B. ALL MATERIALS, INCLUDING SEAT DISCS, PACKING, SEALS AND DIAPHRAGMS SHALL BE RESISTANT TO LP GAS.

C. VALVES AND STRAINERS SHALL HAVE SERVICE RATING OF 400 PSI.

PART 3 – EXECUTION

3.1 INSTALLATION:

A. GENERAL:
1. NO PIPING SHALL BE PERMANENTLY CLOSED UP, FURRED IN OR COVERED OVER BEFORE IT HAS BEEN TESTED AND INSPECTED.
2. PIPE AND FITTINGS SHALL BE CLEANED AND INTERNAL SCALE, SAND, DIRT AND OTHER DEBRIS REMOVED BEFORE INSTALLATION.
3. BUSHING AND SHORT NIPPLES WILL NOT BE PERMITTED.
4. PIPING SUBJECT TO EXPANSION, CONTRACTION OR SETTLING SHALL BE ANCHORED IN A MANNER THAT PERMITS THE STRESS TO BE EVENLY DISTRIBUTED. RECOMMENDATIONS OF THE PIPE MANUFACTURER SHALL BE STRICTLY ADHERED TO. SWING JOINTS AND EXPANSION LOOPS SHALL BE INSTALLED AS RECOMMENDED BY PIPE MANUFACTURER AND AS INDICATED ON DRAWINGS.
5. MAKE JOINTS SMOOTH AND UNOBSTRUCTED INSIDE. REAM CUT ENDS TO REMOVE BURRS. REMOVE OBSTRUCTIONS PRIOR TO FABRICATION AND INSTALLATION. CUT THREADS ACCURATELY, THE AXIS OF THE THREAD COINCIDENT WITH THE AXIS OF THE PIPE.
6. PIPE AND FITTINGS: INSTALL PIPING AND FITTINGS IN ACCORDANCE WITH THE ANSI "CODE FOR PRESSURE PIPE".
7. SCREWED JOINTS FOR STEEL PIPE: PIPING COMPOUND SHALL BE COMPATIBLE FOR FLUID TO BE CONTAINED WITHIN PIPE; USE PIPE JOINT COMPOUND, RECTORSEAL, OR EQUAL. DO NOT APPLY COMPOUND TO FEMALE THREADS IN FITTINGS AND VALVES.
8. UNIONS: REQUIRED ON INLET AND OUTLET OF APPARATUS OR EQUIPMENT HAVING SCREWED AND SOLDERED CONNECTIONS 2 INCHES AND SMALLER (UNION SHALL MATCH PIPING MATERIAL).
9. CHANGE IN PIPE SIZES: MAKE CHANGES IN PIPE SIZES WITH REDUCING ELBOWS, REDUCING TEES OR ECCENTRIC REDUCERS.
10. TEST PIPING SYSTEMS PRIOR TO COVERING PER NFPA–58 6.12 AND NFPA–54 4.1.
11. ALL EXPOSED PIPING SHALL BE PAINTED. USE (1) BASE–PRIMER COAT AND (1) COAT OF EPOXY PAINT.
12. PROTECT ABOVE GRADE PIPING FROM VEHICLE DAMAGE.

END OF SECTION

GENERAL NOTES:

1. ALL WORK SHALL BE DONE IN ACCORDANCE WITH NFPA 58 AND ALL APPLICABLE CODES.
2. PIPING SHOWN ON DRAWINGS IS SCHEMATIC ONLY. INSTALL ALL PIPING TO SUIT THE STRUCTURAL CONDITIONS AT SITE. PROVIDE ALL NECESSARY OFFSETS AS REQUIRED.
3. VERIFY EXACT LOCATION, DEPTH, SIZE, AND ADEQUACY OF ALL SERVICES PRIOR TO STARTING OF WORK. CONTRACTOR SHALL LOCATE ALL UNDERGROUND UTILITIES PRIOR TO TRENCHING.
4. ALL NEW POINT OF CONNECTIONS SHALL BE DONE IN SUCH A MANNER SO THAT THE EXISTING UTILITY SHALL BE KEPT IN OPERATION AT ALL TIMES.
5. PROVIDE ALL PROPANE RELIEF VALVES AS REQUIRED.
6. ALL VALVES, PIPING, UNIONS, ETC. SHALL BE SPECIFIC FOR PROPANE GAS PIPING. ALL PIPING WORK SHALL BE DONE BY A PROPANE PIPING SPECIALTY COMPANY.
7. BURIED PIPING SHALL BE WITH 6" SAND BEDDING AND MINIMUM 12" COVER. MAINTAIN MINIMUM 24" PIPE COVER WHERE PIPE CROSSES DRIVING SURFACES.
8. ALL PIPE SUPPORTS SHALL SUPPORT HORIZONTAL PIPING 4" OFF GROUND. PROVIDE UNISTRUT SECURED TO CONCRETE PAD. WHERE ABOVE GROUND POUR CONCRETE SUPPORT FOOTING.
9. LPG CONTAINERS SHALL BE DESIGNED, FABRICATED, TESTED AND MARKED (OR STAMPED) IN ACCORDANCE WITH D.O.T., OR SHALL BE IN ACCORDANCE WITH APPROVED NATIONALLY RECOGNIZED STANDARDS.
10. CLEARANCE TO COMBUSTIBLES: WEEDS, GRASS, BRUSH, TRASH AND OTHER COMBUSTIBLE MATERIALS SHALL BE KEPT MORE THAN 10 FEET FROM LP–TANKS OR CONTAINERS.
11. A FIRE EXTINGUISHER WITH A MINIMUM RATING OF 2–A, 20–B:C SHALL BE PROVIDED AND LOCATED SUCH THAT IT IS NOT MORE THAN 75 FEET, BUT NOT CLOSER THAN 15 FEET FROM ANY CONTAINER.
12. SOURCES OF IGNITION: SMOKING SHALL BE PROHIBITED WITHIN 25 FEET OF OUTDOOR STORAGE AREAS.
13. EMERGENCY SHUTOFF FOR FLAMMABLE, OXIDIZING AND PYROPHORIC GAS SYSTEMS SHALL BE PROVIDED WITH APPROVED EMERGENCY SHUT–OFF SYSTEMS THAT CAN BE ACTIVATED FROM EACH POINT OF USE AND AT EACH SOURCE.
14. ALL TANKS OVER 60 GALLONS CAPACITY SHALL HAVE PAINTED ON BOTH SIDES THE WORDS "DANGER – FLAMMABLE LIQUID", "NO SMOKING OR OPEN FLAME PERMITTED". WARNING SIGNS SHALL NOT BE LESS THAN 3 INCHES IN HEIGHT AND ONE HALF INCH IN STROKE. NFPA 704 PLACARDS SHALL BE PLACED ON ALL STATIONARY ABOVEGROUND TANKS. NUMBER SYSTEM SHALL CORRESPOND TO MSDS SHEETS FOR PARTICULAR MATERIAL.
15. (DOSH) DIVISION OF OCCUPATIONAL SAFETY & HEALTH (DIVISION PRESSURE VESSEL UNIT) SHALL BE CONTACTED FOR LPG TANK INSTALLATION ABOVE 125 GALLONS (1000 LB) WATER CAPACITY. PRIOR TO FINAL FIRE DEPARTMENT APPROVAL,THIS IS A STATE INSPECTION & THEIR OFFICE WILL ISSUE A PERMIT TO OPERATE. (714) 567–7208
16. ADEQUATE GROUNDING AND BOUNDING SHALL BE PROVIDED TO PREVENT THE ACCUMULATION OF STATIC ELECTRICITY. U.F.C. SEC. 7903.2.1.3
17. EMERGENCY SHUTOFF FOR FLAMMABLE, OXIDIZING AND PYROPHORIC GAS SYSTEMS SHALL BE PROVIDED WITH APPROVED EMERGENCY SHUT–OFF SYSTEMS THAT CAN BE ACTIVATED FROM EACH POINT OF USE AND AT EACH SOURCE. A READILY ACCESSIBLE CYLINDER SHUTOFF VALVE IS ACCEPTABLE FOR SHUTOFF AT THE SOURCE FOR FLAMMABLE AND OXIDIZING GASES. U.F.C. SEC. 8004.1.12

REGISTERED PROFESSIONAL ENGINEER
MARK ALCALDE
No. M28159
EXP 6/30/15
MECHANICAL
STATE OF CALIFORNIA

PARTIAL PLUMBING BLDG. PLAN

SCALE: 1/8" = 1'–0"

Revisions
–

HESSE PARK
EMERGENCY GENERATOR
29301 HAWTHORNE BLVD.
RANCHO PALOS VERDES, CA 90275

Project No. 10012.01
Drawn By: D.C.
Checked By: M.A.
Date: NOV 18–10

THE SULLIVAN PARTNERSHIP, INC.
MECHANICAL ENGINEERS & CONSULTANTS
529 Hahn Ave., Suite 201, Glendale,CA 91203
PH (818) 240–6873 FAX (818) 240–2455
E–mail:tsp@sullivanpartnership.com

Sheet Title:
PLUMBING
SITE PLAN,
SPECIFICATIONS
AND DETAILS

Sheet No.
P-1.0